Te Kaunihera o Te Hiku o te Ika
Far North District Council

Office Use Only
Application Number:

Application for resource consent or fast-track resource consent

(Or Associated Consent Pursuant to the Resource Management Act 1991 (RMA)) (If applying for a Resource Consent pursuant to Section 87AAC or 88 of the RMA, this form can be used to satisfy the requirements of Form 9). Prior to, and during, completion of this application form, please refer to Resource Consent Guidance Notes and Schedule of Fees and Charges — both available on the Council's web page.

1. Pre-Lodgement Meeting

Have you met with a council Resource Covnsent representative to discuss this application prior to lodgement?

◯ **Yes** ✔ **No**

2. Type of consent being applied for

(more than one circle can be ticked):

◯ **Land Use**
◯ **Fast Track Land Use***
◯ **Subdivision**
◯ **Consent under National Environmental Standard**
(e.g. Assessing and Managing Contaminants in Soil)
◯ **Discharge**
◯ **Change of Consent Notice (s.221(3))**
◯ **Extension of time (s.125)**
✔ **Other (please specify)** Variation under s127

**The fast track is for simple land use consents and is restricted to consents with a controlled activity status.*

3. Would you like to opt out of the fast track process?

✔ **Yes** ◯ **No**

4. Consultation

Have you consulted with Iwi/Hapū? ◯ **Yes** ✔ **No**

If yes, which groups have you consulted with?

Who else have you consulted with?

*For any questions or information regarding iwi/hapū consultation, please contact Te Hono at Far North District Council, **tehonosupport@fndc.govt.nz***

5. Applicant details

Name/s: Shu Ping

Email:

Phone number:

Postal address:
(or alternative method of service under section 352 of the act)

Have you been the subject of abatement notices, enforcement orders, infringement notices and/or convictions under the Resource Management Act 1991? ◯ **Yes** ◯ **No**

If yes, please provide details.

6. Address for correspondence

Name and address for service and correspondence (if using an Agent write their details here)

Name/s: Northland Planning & Development 2020 Ltd

Email:

Phone number:

Postal address:
(or alternative method of service under section 352 of the act)

All correspondence will be sent by email in the first instance. Please advise us if you would prefer an alternative means of communication.

7. Details of property owner/s and occupier/s

Name and Address of the owner/occupiers of the land to which this application relates (where there are multiple owners or occupiers please list on a separate sheet if required)

Name/s: Shu Ping

Property address/
location:

8. Application site details

Location and/or property street address of the proposed activity:

Name/s: Shu Ping

Site address/ location:
73A signal Station Road
Omapere
0473
Postcode

Legal description: Lot 1 DP 204637 **Val Number:**

Certificate of title: NA132C/62

Please remember to attach a copy of your Certificate of Title to the application, along with relevant consent notices and/or easements and encumbrances (search copy must be less than 6 months old)

Site visit requirements:

Is there a locked gate or security system restricting access by Council staff? ◯ **Yes** ☑ **No**

Is there a dog on the property? ◯ **Yes** ☑ **No**

Please provide details of any other entry restrictions that Council staff should be aware of, e.g. health and safety, caretaker's details. This is important to avoid a wasted trip and having to re-arrange a second visit.

9. Description of the proposal

Please enter a brief description of the proposal here. Please refer to Chapter 4 of the *District Plan, and Guidance Notes*, for further details of information requirements.

Variation to consent conditions to amend the stormwater design

If this is an application for a Change or Cancellation of Consent Notice conditions (s.221(3)), please quote relevant existing Resource Consents and Consent Notice identifiers and provide details of the change(s), with reasons for requesting them.

10. Would you like to request public notification?

◯ **Yes** ◯ **No**

11. Other consent required/being applied for under different legislation

(more than one circle can be ticked):

◯ **Building Consent** Enter BC ref # here (if known)

◯ **Regional Council Consent (ref # if known)** Ref # here (if known)

◯ **National Environmental Standard Consent** Consent here (if known)

◯ **Other (please specify)** Specify 'other' here

12. National Environmental Standard for Assessing and Managing Contaminants in Soil to Protect Human Health:

The site and proposal may be subject to the above NES. In order to determine whether regard needs to be had to the NES please answer the following:

Is the piece of land currently being used or has it historically ever been used for an activity or industry on the Hazardous Industries and Activities List (HAIL)? ◯ **Yes** ☑ **No** ◯ **Don't know**

Is the proposed activity an activity covered by the NES? Please tick if any of the following apply to your proposal, as the NESCS may apply as a result? ◯ **Yes** ☑ **No** ◯ **Don't know**

◯ **Subdividing land**

◯ **Changing the use of a piece of land**

◯ **Disturbing, removing or sampling soil**

◯ **Removing or replacing a fuel storage system**

13. Assessment of environmental effects:

Every application for resource consent must be accompanied by an Assessment of Environmental Effects (AEE). This is a requirement of Schedule 4 of the Resource Management Act 1991 and an application can be rejected if an adequate AEE is not provided. The information in an AEE must be specified in sufficient detail to satisfy the purpose for which it is required. Your AEE may include additional information such as written approvals from adjoining property owners, or affected parties.

Your AEE is attached to this application ☑ **Yes**

14. Draft conditions:

Do you wish to see the draft conditions prior to the release of the resource consent decision? ☑ **Yes** ◯ **No**

If yes, please be advised that the timeframe will be suspended for 5 working days as per s107G of the RMA to enable consideration for the draft conditions.

15. Billing Details:

This identifies the person or entity that will be responsible for paying any invoices or receiving any refunds associated with processing this resource consent. Please also refer to Council's Fees and Charges Schedule.

Name/s: (please write in full)	Shaun Francois
Email:	
Phone number:	
Postal address: (or alternative method of service under section 352 of the act)	

Fees Information

An instalment fee for processing this application is payable at the time of lodgement and must accompany your application in order for it to be lodged. Please note that if the instalment fee is insufficient to cover the actual and reasonable costs of work undertaken to process the application you will be required to pay any additional costs. Invoiced amounts are payable by the 20th of the month following invoice date. You may also be required to make additional payments if your application requires notification.

15. Billing details continued...

Declaration concerning Payment of Fees

I/we understand that the Council may charge me/us for all costs actually and reasonably incurred in processing this application. Subject to my/our rights under Sections 357B and 358 of the RMA, to object to any costs, I/we undertake to pay all and future processing costs incurred by the Council. Without limiting the Far North District Council's legal rights if any steps (including the use of debt collection agencies) are necessary to recover unpaid processing costs I/we agree to pay all costs of recovering those processing costs. If this application is made on behalf of a trust (private or family), a society (incorporated or unincorporated) or a company in signing this application I/we are binding the trust, society or company to pay all the above costs and guaranteeing to pay all the above costs in my/our personal capacity.

Name: (please write in full) Shaun Francois

Signature:
(signature of bill payer)

Date 12-Oct-2026

MANDATORY

16. Important Information:

Note to applicant

You must include all information required by this form. The information must be specified in sufficient detail to satisfy the purpose for which it is required.

You may apply for 2 or more resource consents that are needed for the same activity on the same form.

You must pay the charge payable to the consent authority for the resource consent application under the Resource Management Act 1991.

Fast-track application

Under the fast-track resource consent process, notice of the decision must be given within 10 working days after the date the application was first lodged with the authority, unless the applicant opts out of that process at the time of lodgement.

A fast-track application may cease to be a fast-track application under section 87AAC(2) of the RMA.

Privacy Information:

Once this application is lodged with the Council it becomes public information. Please advise Council if there is sensitive information in the proposal. The information you have provided on this form is required so that your application for consent pursuant to the Resource Management Act 1991 can be processed under that Act. The information will be stored on a public register and held by the Far North District Council. The details of your application may also be made available to the public on the Council's website, www.fndc.govt.nz. These details are collected to inform the general public and community groups about all consents which have been issued through the Far North District Council.

17. Declaration

The information I have supplied with this application is true and complete to the best of my knowledge.

Name (please write in full) Shaun Francois

Signature

Date 12-Oct-2026

A signature is not required if the application is made by electronic means

See overleaf for a checklist of your information...

Checklist

Please tick if information is provided

- ◯ Payment (cheques payable to Far North District Council)
- ◯ A current Certificate of Title (Search Copy not more than 6 months old)
- ◯ Details of your consultation with Iwi and hapū
- ◯ Copies of any listed encumbrances, easements and/or consent notices relevant to the application
- ◯ Applicant / Agent / Property Owner / Bill Payer details provided
- ◯ Location of property and description of proposal
- ◯ Assessment of Environmental Effects
- ◯ Written Approvals / correspondence from consulted parties
- ◯ Reports from technical experts (if required)
- ◯ Copies of other relevant consents associated with this application
- ◯ Location and Site plans (land use) AND/OR
- ◯ Location and Scheme Plan (subdivision)
- ◯ Elevations / Floor plans
- ◯ Topographical / contour plans

Please refer to Chapter 4 of the District Plan for details of the information that must be provided with an application. Please also refer to the RC Checklist available on the Council's website. This contains more helpful hints as to what information needs to be shown on plans.

Variation to 2260578 - RMALUC

Shu Ping

73A Signal Station Road, Omapere

6 October 2026

Please find below an application to vary conditions on an existing land-use consent RC 2260578-RMA-LUC. This application is supported by an Assessment of Environmental Effects.

Pursuant to Section 127 of the Resource Management Act, the Applicant is seeking to vary the conditions of RC 2260578 - RMALUC which established a pavilion within the site legally described as Lot 1 DP 204637. The application was assessed as a Discretionary Activity within the Coastal Living zone under the Operative District Plan (ODP). Consent was granted on 26th June 2026.

The variation to RC 2260578 - RMALUC is a **Discretionary Activity** under Section 127 of the RMA.

Regards,

Director/Senior Planner

NORTHLAND PLANNING & DEVELOPMENT 2020 LIMITED

Contents

1. Description of the Proposed Activity 3
PROPOSED DISTRICT PLAN – APPEALS VERSION 5
2. Description of the Site and Surrounding Environment 5
TITLE 6
3. Reasons for Consent 6
SECTION 127 OF THE RESOURCE MANAGEMENT ACT (RMA) 6
NATIONAL ENVIRONMENTAL STANDARDS 6
NATIONAL ENVIRONMENTAL STANDARDS FOR ASSESSING AND MANAGING CONTAMINANTS IN SOIL TO PROTECT HUMAN HEALTH 2011 (NESCS) 6
4. Statutory Assessment 6
SECTION 104 OF THE RESOURCE MANAGEMENT ACT 1991 6
FAR NORTH OPERATIVE DISTRICT PLAN AND PROPOSED DISTRICT PLAN - APPEALS VERSION 8
5. Part 2 Assessment 9
6. Conclusion 9
7. Limitations 10

Appendices

1. **Far North District Council Application Form**
2. **Record of Title** – *LINZ*
3. **Stormwater Management Technical note –** *BG&E*
4. **Stormwater Management Plan set –** *BG&E*
5. **Stormwater attenuation routing calculator –** *BG&E*
6. **Stormwater T-Bar calculations –** *BG&E*
7. **RC 2260578 - RMALUC – Approved Decision** – *FNDC*

Assessment of Environment Effects Report

1. Description of the Proposed Activity

1.1. Pursuant to Section 127 of the Resource Management Act, the Applicant is seeking to vary Conditions 1, 5 & 6 of resource consent RC 2260578 - RMALUC which was required to establish a pavilion on the site. The proposal breached Visual Amenity, Stormwater Management and Setback from boundaries and was assessed as a Discretionary Activity under the Operative District Plan (ODP). A variation to Condition 3 within Consent Notice D579879.2 was also sought to exceed the height limit imposed. The consent was approved on 26th June 2026.

1.2. After site specific soakage testing was completed, it was found that the below ground soakage trench would not be appropriate, and an alternative mitigation method was required.

1.3. It is proposed to alter the stormwater design for roof runoff from the pavilion to be collected to an attenuation tank. The attenuation tank has been sized accordingly to comply with FNDC engineering standards. A technical note from BG&E has been prepared which covers the system design along with attenuation calculations (**Appendix 4 -6**).

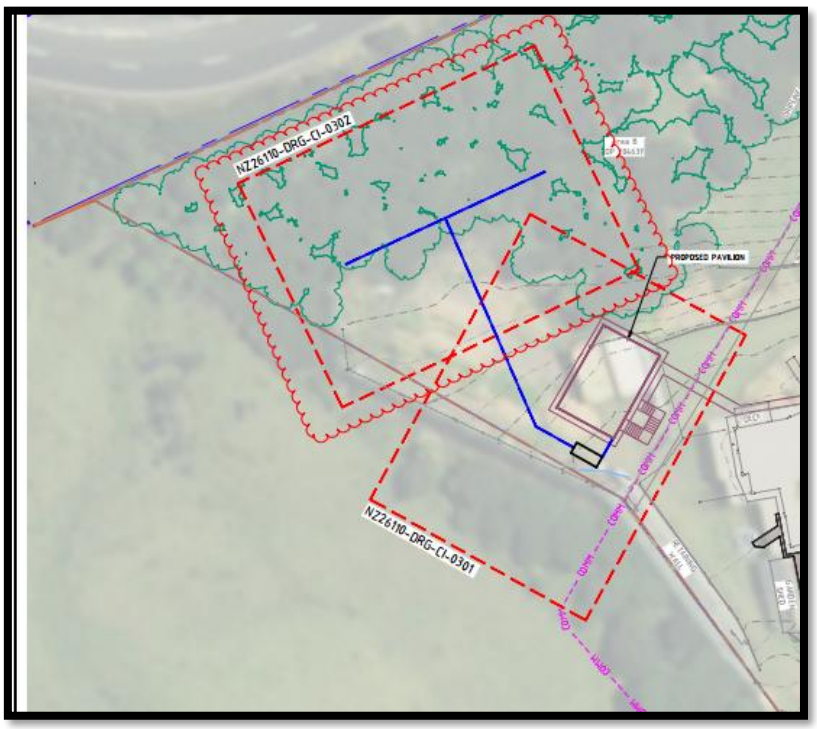

Figure 1: Site Plan showing proposed stormwater mitigation.

1.4. The proposal does not result in any additional breaches to what was sought under RC 2260578 and as such, it is considered appropriate to apply for a variation to the existing approved consent to reflect the amended stormwater design.

1.5. To enable the revised stormwater report & plan to be used, the application seeks to vary the following conditions:

CONDITIONS:

- *Condition 1 -*

  The activity must be carried out in accordance with the approved plans and supporting documents submitted with the application and attached to this consent with the Council's "Approved Stamp" affixed.

  - Architectural Plans, titled "Pavilion Option Ai", prepared by HM Design, Dated 13 April 2026, 18 April 2026, 22 May 2026 and 24 May 2026
  - Stormwater and Drainage Plans, prepared by BG&E Consulting Ltd, Project NZ26110, Drawings ~~CI-0300,CI-0380 to CI-0381, dated 15 May 2026~~.
  - CI-0300 Rev B, CI-0301 Rev B, CI-0302 Rev B, CI-0380 Rev B, CI-0381 Rev B, CI-0382 Rev B and BG&E Technical note dated 3/9/2026

- *Condition 5*

  *Stormwater from the pavilion roof must be directed to the attenuation tank and ~~soakage system~~ **above ground T-bar diffuser** in accordance with the approved BG&E Stormwater Technical Note dated ~~5 June~~ **3 September** 2026. The stormwater management system must be installed prior to the use of the pavilion and maintained thereafter.*

- *Condition 6*

  Prior to the use of the pavilion, the consent holder must provide certification from a suitably qualified and experienced person (SQEP) confirming that the stormwater attenuation tank, ~~soakage trench~~ and associated drainage have been constructed in accordance with the approved BG&E stormwater design.

1.6. The variation to RC 2260578 - RMALUC is a **Discretionary Activity** under Section 127 of the RMA.

Proposed District Plan – Appeals Version

1.7. The Appeals Version of the PDP (PDP-AV) is now available and details provisions which are subject to appeal. Provisions that are not appealed will be treated as 'operative' replacing equivalent provisions of the operative plan. If there are live appeals against a proposed provision, the proposed provision and any equivalent provisions may need to be considered through the resource consent process. Given the stage that the PDP-AV is at, greater weighting is applied to the PDP-AV rather than the ODP. As the appeals are addressed, those remaining matters in the ODP will fall away.

1.8. The PDP-AV Rural Lifestyle zone (RLZ) provisions have not been appealed and as such, replace the corresponding ODP zone rules. In terms of the RLZ rules, the impermeable surface coverage within the site would result in a Restricted Discretionary Activity. Matters of discretion relate to the effects of the impermeable surfaces which have been previously addressed within RC 2260578 as well as within the updated Technical Note attached within **Appendix 3**. The proposed amendment to the stormwater design will not alter the percentage of the site covered by buildings. The site is located within the Coastal Environment Overlay within the PDP-AV and as such, the visual aspects of the consent will not change as a result of the variation.

1.9. Given the proposal does not result in a more restrictive activity status or any new rule infringements compared to what has previously been approved under RC 2260578, it is considered appropriate for the proposal to proceed as a variation under Section 127 of the Act.

2. Description of the Site and Surrounding Environment

2.1. The subject site is located at 73A Signal Station Road, Omapere. The site is bounded by privately owned allotments on the western, eastern and southern boundaries of the site and bounded by Signal Heights Road along the northern boundary.

2.2. The site contains an existing consented dwelling and shed, which are located slightly off centre, towards the southern portion of the site. Access is via an existing right of way along the eastern

boundary, which leads to the internal access within the southeastern portion of the site. The northern portion of the site is dominated by native shrubland, as well as the western and southern boundaries

Title

2.3. The subject site is held within Record of Title NA132C/62 which is dated 15th February 2001. The site has a legal area of 8550m^2.

2.4. Consent Notice D579879.2 is registered on the Record of Title. As mentioned, a variation to condition 3 of this consent notice was applied for and approved under RC 2260578.

3. Reasons for Consent

Section 127 of the Resource Management Act (RMA)

3.1. This application seeks to vary conditions of an existing resource consent RC 2260578 - RMALUC as described in Section 1.0 above resulting from changes to the stormwater design and disposal method. Section 127(3) states that Sections 88-121 apply, with all the necessary modifications, as if the application were an application for a resource consent for a Discretionary Activity.

3.2. The site is zoned 'Coastal Living' under the ODP and has been rezoned to 'Rural Lifestyle' under the PDP-AV. The reasons for consent under the ODP remain the same as the original application. There are no other works proposed that would require additional consents under either of the applicable district plans.

National Environmental Standards

National Environmental Standards for Assessing and Managing Contaminants in Soil to Protect Human Health 2011 (NESCS)

3.3. As per RC 2260578, the site is not known to have any activities undertaken (past or present) that are listed on the HAIL. The application is considered Permitted in terms of this regulation.

4. Statutory Assessment

Section 104 of the Resource Management Act 1991

4.1. Applications to vary or cancel conditions of a resource consent are subject to Sections 88-121 where they are applicable. This includes Section 104, which sets out matters for consideration when deciding a resource consent.

4.2. Section 104(1) of the RMA states that when considering an application for resource consent –

"the consent authority must, subject to Part II, have regard to –

(a) any actual and potential effects on the environment of allowing the activity; and

(ab) any measure proposed or agreed to by the applicant for the purpose of ensuring positive effects on the environment that will or may result from allowing the activity; and

(b) any relevant provisions of –

i. a national environmental standard:

ii. other regulations:

iii. a national policy statement:

iv. a New Zealand Coastal Policy Statement:

v. a regional policy statement or proposed regional policy statement:

vi. a plan or proposed plan; and

(c) any other matter the consent authority considers relevant and reasonably necessary to determine the application."

4.3. The Council has previously granted resource consent to establish a pavilion on the subject site, which is to be used as an entertainment room. The existing character of the site and surrounding environment will be preserved and enhanced given the measures recommended within the LVEA. The proposed change to the stormwater system will not alter how the site is perceived from the outside environment.

4.4. In respect of potential adverse effects, the Council has previously concluded that any potential adverse effects will be no more than minor and that there are no affected persons. The extent of works is contained within the site boundaries and correspondingly the potential adverse effects.

4.5. As a result of soakage testing, it was found that the below ground soakage trench would not be appropriate, and an alternative mitigation method is required. BG&E have provided an updated technical note that demonstrates the stormwater runoff from the pavilion is to be collected to an attenuation tank with a controlled discharge via a T-Bar diffuser.

4.6. The proposal does not result in any adverse effects on adjoining property owners or public road, given that effects can be managed within the site boundaries. It is considered that effects on adjoining properties will be less than minor.

4.7. Given the minor nature of the changes proposed and the fact that there are no additional rule breaches created compared to what was approved under RC 2260578, it is considered appropriate to vary the conditions of consent to reflect the updated stormwater report.

Far North Operative District Plan and Proposed District Plan - Appeals Version

4.8. An assessment of the relevant objectives and policies of the ODP were provided as part of the original application under RC 2260578. This assessment concluded that the proposal was generally consistent with the relevant objectives and policies of the ODP.

4.9. In terms of the PDP-AV, the site is within the Rural Lifestyle zone which has generally been applied to areas zoned under the ODP as Coastal Living. The RLZ provides allotments which can primarily accommodate a residential activity while having the option of growing their own food and other domestic activities. Retaining a sense of spaciousness and rural character is important within the RLZ. Given the proposal will not see a change in use of the site or how the site is perceived from the surrounding environment, it is considered the proposal meets the objectives and policies of the RLZ. Amenity and character will be maintained by retaining the natural and recessive colour scheme and the proposed landscaping and natural hazards will not be exacerbated. As detailed earlier in this assessment, the proposal does not result in any new rule infringements under the PDP-AV, that have not already been addressed as part of the original RC 2260578. As such, it is considered that all effects have been adequately addressed.

4.10. Given the proposed variation will not alter the existing use of the site, it is considered that the proposal will remain consistent with the objectives and policies of the relevant statutory documents and no further assessment will be provided for.

5. Part 2 Assessment

5.1. The application must be considered in relation to the purpose and principles of the Resource Management Act 1991 which are contained in Section 5 to 8 of the Act inclusive.

5.2. The proposal will meet Section 5 of the RMA as the proposal will sustain the potential of the natural and physical resource whilst meeting the foreseeable needs of future generations.

5.3. Section 6 of the Act sets out matters of national importance. The application is considered to meet this Section of the Act.

5.4. Section 7 identifies "other matters" to be given particular regard by a Council when assessing an application for resource consent, including the maintenance and enhancement of amenity values. The proposal maintains amenity values in the area as the proposal is in keeping with the existing character of the surrounding environment.

5.5. Section 8 requires Council to 'take into account' the principles of the Treaty of Waitangi (Te Tiriti o Waitangi). It is considered that the proposal would not be contrary to the principles of Te Tiriti.

5.6. Overall, the application is consistent with the relevant provisions of Part 2 of the RMA, as expressed through the objectives, policies and rules reviewed in earlier sections of this application. Given that consistency, it is concluded that the proposal achieves the purpose of sustainable management set out by Sections 5-8 of the Act.

6. Conclusion

6.1. The Applicant is seeking to vary the conditions of an existing resource consent RC 2260578 to reflect the proposed changes to the stormwater design. The proposed variation will not alter the existing use of the site as previously approved.

6.2. The proposal to vary the existing conditions of consent is a Discretionary Activity under Section 127 of the RMA.

6.3. The Council has previously assessed potential adverse effects arising from the development of the site with a pavilion and the associated impermeable surfaces and concluded that the

activity will not have, and is not likely to have, adverse effects on the environment that are more than minor. There are no affected persons.

6.4. It is therefore considered appropriate to grant the variation to consent conditions on a non-notified basis, under s127 of the Act.

7. Limitations

7.1. This report has been commissioned solely for the benefit of our client, in relation to the project as described above, and to the limits of our engagement, with the exception that the Far North District Council or Northland Regional Council may rely on it to the extent of its appropriateness, conditions and limitations, when issuing their subject consent.

7.2. Copyright of Intellectual Property remains with Northland Planning and Development 2020 Limited, and this report may NOT be used by any other entity, or for any other proposals, without our written consent. Therefore, no liability is accepted by this firm or any of its directors, servants or agents, in respect of any information contained within this report.

7.3. Where other parties may wish to rely on it, whether for the same or different proposals, this permission may be extended, subject to our satisfactory review of their interpretation of the report.

7.4. Although this report may be submitted to a local authority in connection with an application for a consent, permission, approval, or pursuant to any other requirement of law, this disclaimer shall still apply and require all other parties to use due diligence where necessary.

RECORD OF TITLE
UNDER LAND TRANSFER ACT 2017
FREEHOLD

Guaranteed Search Copy issued under Section 60 of the Land Transfer Act 2017

R.W. Muir
Registrar-General
of Land

Identifier	**NA132C/62**
Land Registration District	**North Auckland**
Date Issued	15 February 2001

Prior References
NA66C/253

Estate	Fee Simple
Area	8550 square metres more or less
Legal Description	Lot 1 Deposited Plan 204637
Registered Owners	

Shu Ping

Interests

Appurtenant hereto is a right of way specified in Easement Certificate B733842.3 - 25.9.1987 at 2.48 pm

D579879.2 Consent Notice pursuant to Section 221(1) Resource Management Act 1991 - 15.2.2001 at 9.00 am

Subject to telecommunications and electricity supply rights over part marked F on DP 204637 specified in Easement Certificate D579879.5 - 15.2.2001 at 9.00 am

The easements specified in Easement Certificate D579879.5 are subject to Section 243 (a) Resource Management Act 1991

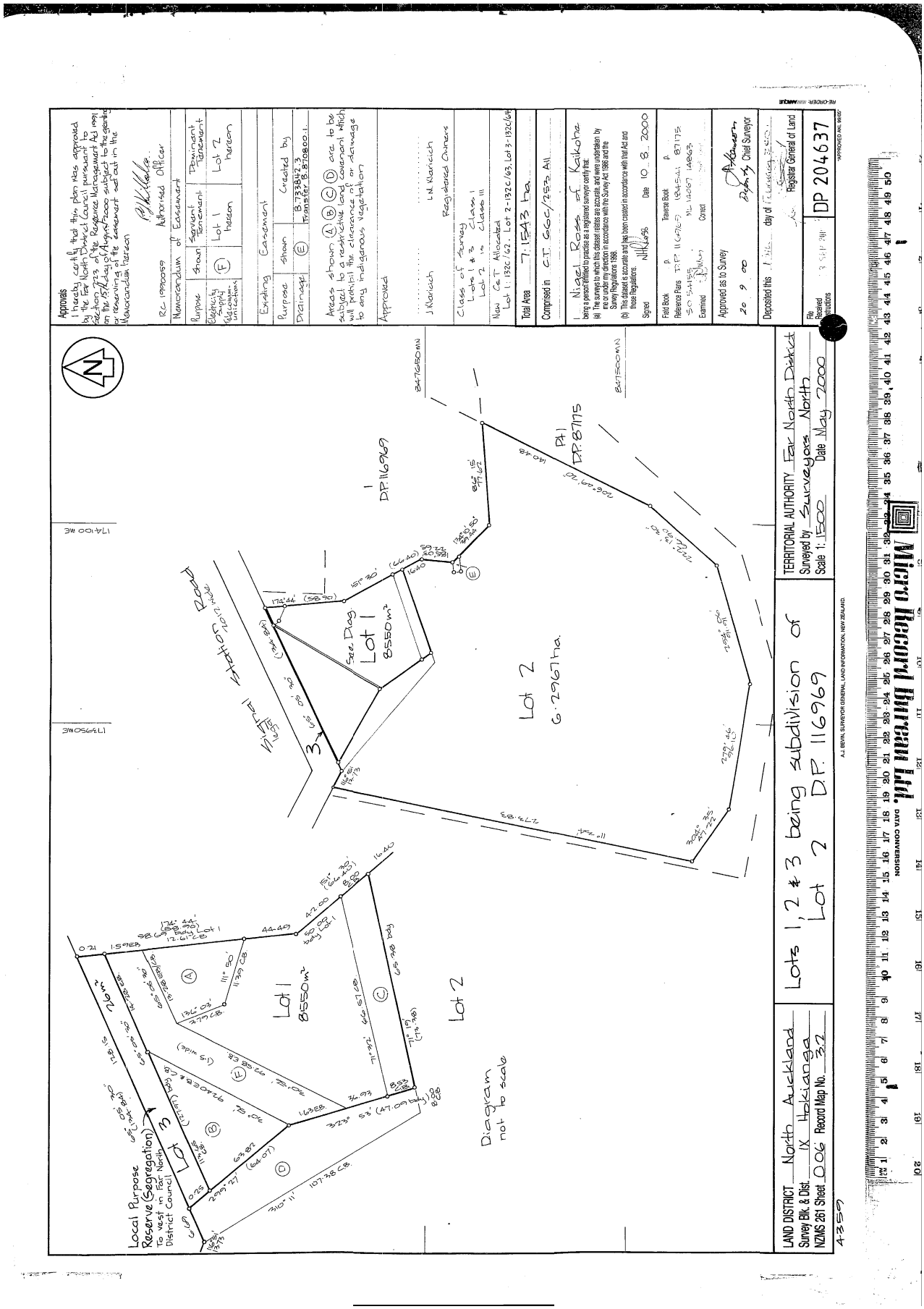
Approvals
I hereby certify that this plan was approved by the Far North District Council pursuant to Section 223 of the Resource Management Act 1991 on the 15th day of August 2000 subject to the deposit or reserving of the easement set out in the Memorandum thereon
RC 19980059
Authorised Officer
Memorandum of Easement
Purpose | Shown | Servient Tenement | Dominant Tenement
Electricity (Telecommunications) | F | Lot 1 hereon | Lot 2 hereon
Existing Easement
Purpose | Shown | Created by
Drainage | E | B 7338142.3 Transfer & 870800.1
Areas shown A B C D are to be subject to a restrictive land covenant which will prohibit the clearance of or damage to any indigenous vegetation
Approved
L.N. Klarich
Registered Owners
Class of Survey Lots 1 & 2 Class I Lot 2 in Class III
New Cert Allocated Lot 1: 132C/62. Lot 2-132C/63, Lot 3-132C/64
Total Area 7.1543 ha
Comprised in C.T. 56C/1252 All
I, Nigel Ross of Kaikohe being a person entitled to practise as a registered surveyor certify that:
(a) The survey to which this dataset relates is accurate, and were undertaken by me or under my supervision in accordance with the Survey Act 1986 and the Survey Regulations 1990
(b) This dataset is accurate and has been created in accordance with that Act and those Regulations
Signed NJK Date 10 8 2000
Field Book P Traverse Book P
Reference Plans 116969 124541, 87175 SO 54195 ML 12067, 12663
Examined JWN Correct
Approved as to Survey
20 9 00
Deputy Chief Surveyor
Deposited this 15th day of September 2000
File Reference
Registrar General of Land
DP 204637
TERRITORIAL AUTHORITY Far North District
Surveyed by Surveyors North
Scale 1:1500 Date May 2000
LAND DISTRICT North Auckland
Survey Blk. & Dist. IX Hokianga
NZMS 261 Sheet 006 Record Map No. 3.2
Lots 1, 2 & 3 being subdivision of Lot 2 DP 116969
A.J. BEVIN, SURVEYOR GENERAL, LAND INFORMATION, NEW ZEALAND
Diagram not to scale
Lot 1 8550m²
Lot 2 6.2967ha.
Sec Dag
DP 116969
DP 87175
Pt 1
Local Purpose Reserve (Segregation) To vest in Far North District Council
Lot 3
Lot 2
Lot 1
Lot 2
Lot 1
Lot 2
Lot 1

Technical Note – 73a Signal Station Road Stormwater Memorandum

Project Number	**P000684**
Client	**Complete Construction**
Date	**3 September 2026**
Document Number	**001**
Revision	**C**
Prepared By	**Sterling Morgan**
Reviewed By	**Stephen Hazelwood**
Approved By	**Kieran Woods**

---

1 Introduction

This memorandum has been prepared in support of the proposed pavilion development works at 73a Signal Station Road and the associated Resource Consent amendment to the Far North District Council (FNDC).

The purpose of this memorandum is to outline the proposed stormwater management approach for the pavilion development and demonstrate general compliance with the relevant requirements of:

- New Zealand Building Code (NZBC) Clause E1 - Surface Water.
- E1/AS1 Acceptable Solution.
- Far North District Council Engineering Standards (May 2023).

The proposed works comprise the construction of a new pavilion building resulting in approximately 70 m² of additional roof area and associated stormwater infrastructure

The proposed stormwater strategy comprises attenuation of pavilion roof runoff followed by controlled surface dispersal via an above-ground T-bar diffuser. The system has been developed having regard to the site-specific geotechnical investigation and soakage testing described in Section 3.

The design intent is to manage runoff from the proposed pavilion, reduce peak discharge rates, provide controlled onsite stormwater dispersal and avoid adverse stormwater effects on surrounding land.

2 Available Data

2.1 Table 1: Available Data

Data	Source	Comment
FNDC Engineering Standards (May 2023)	Far North District Council	Adopted as the primary local authority engineering design standard for stormwater infrastructure and attenuation requirements.
NZBC E1/AS1 Surface Water	New Zealand Building Code	Used for stormwater collection, pipe sizing, catchpit arrangements, and general surface water compliance requirements.
HIRDS Rainfall Data	NIWA HIRDS v4	Used to obtain design rainfall intensities and storm durations for attenuation and pipe capacity modelling.
Architectural and Civil Site Layout Information	Complete Construction / Project Design Team	Used to determine proposed impervious areas, roof layouts, drainage catchments, and discharge arrangements
Geotechnical Investigation Report	Project Geotechnical Consultant	Used to assess groundwater conditions, soil characteristics, infiltration considerations, and pavement drainage recommendations.

3 Existing Site Conditions

3.1 Background

The proposed pavilion development is located adjacent to an existing private residence. The proposed works introduce approximately 70 m² of additional roof area. Existing site runoff generally disperses across the surrounding land and existing drainage network.

A review of Far North District Council (FNDC) GIS mapping and Northland Regional Council (NRC) GIS mapping indicates the site is not identified as being subject to mapped flood hazards or overland flow path constraints. No mapped flood susceptibility affecting the proposed pavilion area has been identified within the available Council mapping records.

Site-specific soakage testing has subsequently been undertaken to assess the suitability of the site for stormwater disposal. Testing identified a distinct difference between the shallow and deeper soil horizons, with soakage rates of greater than approximately 10 mm/hr within the upper 300 mm of soil and less than approximately 1 mm/hr within the more cohesive soils below approximately 300 mm depth.

Based on the available geotechnical information and subsequent site-specific testing:

- No persistent shallow groundwater conditions have been identified.
- The deeper cohesive soils have poor infiltration characteristics, while the upper approximately 300 mm exhibits comparatively better infiltration characteristics.
- A conventional below-ground soakage trench is therefore not considered appropriate.
- The geotechnical engineer has confirmed that surface stormwater dispersal is acceptable subject to a maximum long-term loading of 20 L/day per metre width across contour.

3.2 Vegetation Protection Areas

The site contains areas identified as Area A and Area B on the survey plan that are subject to restrictions on indigenous vegetation clearance. The relevant consent notice condition prohibits the clearance of, or damage to, indigenous vegetation within these areas.

The proposed civil works have therefore been developed on the basis that no indigenous vegetation within Area A or Area B is to be cleared, removed, trimmed or otherwise damaged because of the works.

All proposed stormwater infrastructure, including the attenuation system, associated pipework and T-bar diffuser, shall be installed and maintained without disturbance to indigenous vegetation within these protected areas. Where construction or maintenance cannot be undertaken without vegetation clearance or damage, the affected works shall not proceed until the implications for the existing consent and District Plan requirements have been reviewed.

The protected vegetation areas and applicable construction restrictions are identified on the civil drawings.

4 Design Criteria

The stormwater design has been undertaken generally in accordance with:

- NZBC Clause E1 - Surface Water.
- E1/AS1 Acceptable Solution.
- FNDC Engineering Standards (May 2023).
- Site-specific geotechnical advice.
- Accepted stormwater engineering practice.

The proposed attenuation system has been assessed for the 50% AEP (2-year) and 20% AEP (5-year) storm events. Rainfall intensities have been derived from NIWA HIRDS using the adopted RCP8.5 climate change scenario for the 2081–2100 projection period.

The downstream T-bar diffuser has been assessed against the geotechnically recommended maximum long-term dispersal loading of 20 L/day/m across contour and separately checked for hydraulic capacity during the 1% AEP event.

5 Stormwater Design

5.1 Proposed Stormwater system

The proposed stormwater system for the pavilion comprises:

- Roof gutters and downpipes (by others).
- Piped stormwater reticulation.
- A 3,000 L attenuation tank.
- A controlled outlet via orifice plate.
- T-Bar Diffuser

Roof runoff generated from the proposed pavilion roof area will be collected and conveyed via a sealed pipe network to the attenuation tank. The attenuation tank has been sized to attenuate runoff generated by the 50% and 20% AEP storm events generally consistent with FNDC requirements prior to controlled discharge to the downstream T-Bar diffuser.

Discharge from the attenuation tank is controlled via a small diameter orifice outlet intended to reduce peak discharge rates and provide gradual release of stored runoff to the T-Bar diffuser.

The revised disposal system therefore comprises a 23 m minimum length DN100 uPVC above-ground T-bar diffuser, installed generally parallel to the existing contours. The diffuser is centre fed from the attenuation tank and comprises approximately 11.5 m of effective distribution pipe in each direction.

The T-bar diffuser incorporates:

- Minimum effective diffuser length of 23 m.
- DN100 uPVC distribution pipe.
- Centre-fed configuration.
- 8 mm diameter perforations at 250 mm centres along the effective diffuser length.
- Above-ground installation supported on galvanised steel waratahs.
- Removable end caps to facilitate inspection and flushing.

5.2 Attenuation Assessment

Hydraulic calculations have been undertaken using a Rational Method-based inflow assessment and timestep storage routing approach utilising NIWA HIRDS rainfall data based on the RCP8.5 climate change scenario for the 2081-2100 period.

The modelling indicates that:

- The proposed 3,000 L attenuation tank provides sufficient storage for the assessed 50% and 20% AEP events.
- The maximum routed storage requirement is approximately 0.52 m³ for the 50% AEP event.
- The maximum routed storage requirement is approximately 0.71 m³ for the 20% AEP event.
- The critical storm duration for both events is approximately 10 minutes.
- The proposed tank provides significant available storage above the calculated routed storage demand.

The modelling also indicates that some routed timestep outflows marginally exceed the calculated theoretical allowable discharge rates. Given the relatively small contributing roof catchment area, achieving strict theoretical compliance would require an impractically small outlet orifice, which would increase blockage and maintenance risk. The adopted outlet arrangement is therefore considered a practical minimum outlet control suitable for the scale of the development. The modelling outputs are shown in Appendix A.

5.3 T-Bar Diffuser Assessment

The T-bar diffuser described in Section 5.1 has been assessed against the long-term geotechnical dispersal criterion established in Section 4 and for hydraulic capacity during the 1% AEP event.

5.3.1 Long-Term Dispersal Loading

Based on the adopted design parameters, the pavilion roof generates an estimated average runoff volume of approximately 456 L/day.

Distributed over the proposed 23 m minimum effective diffuser length, the resulting long-term loading is approximately:

456 / 23 = 19.8 L/day/m

This is less than the geotechnically recommended maximum loading of 20 L/day/m and therefore satisfies the adopted long-term dispersal criterion.

5.3.2 Hydraulic Capacity

The T-bar diffuser has also been checked against the calculated 1% AEP 10-minute pavilion roof runoff. The calculated peak flow for this event is approximately 3.16 L/s.

Hydraulic assessment of the DN100 diffuser and proposed perforation arrangement described in Section 5.1 confirms that sufficient discharge capacity is available to accommodate the calculated 1% AEP flow.

The proposed T-bar diffuser therefore satisfies both the long-term geotechnical dispersal criterion and the 1% AEP hydraulic capacity check.

Detailed calculations are provided in Appendix B.

6 Conclusion

The proposed pavilion stormwater system comprises attenuation of roof runoff followed by controlled surface dispersal via an above-ground T-bar diffuser. The attenuation assessment demonstrates that the proposed tank provides sufficient storage for the assessed 50% and 20% AEP events, as detailed in Section 5.2.

The proposed T-bar diffuser satisfies the geotechnically recommended long-term dispersal criterion and has sufficient hydraulic capacity for the assessed 1% AEP event, as detailed in Section 5.3. On this basis, the proposed system is considered an appropriate stormwater management solution for the pavilion development and generally consistent with the intent of NZBC Clause E1 and the relevant FNDC Engineering Standards.

7 Appendices

Appendix A - Attenuation Calculations
Appendix B - T-Bar diffuser Calculations
Appendix C - Stormwater Layout Drawings

Appendix A - Attenuation Calculations

BG&E Studio 9/106 Saint Georges Bay Road Auckland, New Zealand	**SPREADSHEET CONTROL** **AUTHOR:** GS **REVIEWER:** SM **DATE:** 14/05/26	**TITLE**	STORMWATER PRE/POST FLOW ATTENUATION ROUTING CALCULATOR
		PROJECT	73a Signal Station Road
		DATE	15/05/2026
		JOB NO	NZ25xxx
		FILE REF	"REF"
		AUTHOR	GS
		PROJ LEADER	SM
		LOCATION / HIRDS SITE	73a Signal Station Road
		REVISION	A

NOTES

Pre-development surface	**Area (m²)**	**Runoff coefficient C**	**C x Area**
Pervious / grass	70.00	0.35	24.5
Existing roof	0.00	0.95	0
Existing paved / sealed	0.00	0.80	0
Other	0.00	0.50	0
TOTAL / weighted C	70.00	0.35	24.5

Post-development surface	**Area (m²)**	**Runoff coefficient C**	**C x Area (m²)**
Pervious / grass	0.00	0.35	0
New roof	70.00	0.95	66.5
New paved / sealed	0.00	0.80	0
Other	0.00	0.50	0
TOTAL / weighted C	70.00	0.95	66.5

Hydrology Output Check		**Flow Control / Tank Inputs**		
Pre total area (m²)	70.00	Allowable discharge factor	0.80	Typically 0.8 x pre-development peak flow (FNDC)
Pre weighted C	0.35	Proposed tank storage volume (m³)	2.00	Enter proposed active storage volume
Post total area (m²)	70.00	Active storage depth (m)	2.00	Depth between storage invert and overflow/TWL
Post weighted C	0.95	Tank plan area (m²)	1.00	Calculated as volume / active depth
Area change (m²)	0.00	Orifice diameter (mm)	30.00	Controlled outlet size
NOTE: EDIT BLUE CELLS ONLY		Orifice discharge coefficient Cd	0.62	Typical sharp-edged orifice
		Orifice centre above storage invert (m)	0.15	Used in routing head calculation
		Routing timestep (min)	5.00	5 min is usually adequate

Appendix B -
T-Bar Diffuser Calculations

73A SIGNAL STATION ROAD – PAVILION STORMWATER T-Bar Defussor				Notes
BG&E Studio 9/106 Saint Georges Bay Road Auckland, New Zealand	**SPREADSHEET CONTROL** **AUTHOR:** GS **REVIEWER:** SM **DATE:** 14/05/26	**TITLE**	T-Bar Defusser Calculations	
		PROJECT	73a Signal Station Road	
		DATE	3/09/2026	
		JOB NO	NZ25xxx	
		FILE REF	"REF"	
		AUTHOR	GS	
		PROJ LEADER	SM	
		LOCATION / HIRDS SITE	73a Signal Station Road	
		REVISION	A	
Design status	Building Consent			
Compliance basis	NZBC E1 specific design / Alternative Solution			
Geotechnical basis	Above-ground spreader supported; max long-term loading 20 L/day/m across contour			

1. DESIGN INPUTS

Parameter	Value	Units	Basis / Comment	Notes
Roof catchment area	70.00	m²	Pavilion roof catchment	
Roof runoff coefficient	0.95	-	Impervious roof surface	
Mean annual rainfall	2500.00	mm/year	Adopted Northland average rainfall	
1% AEP 10-min rainfall intensity	171.00	mm/hr	HIRDS design rainfall	
Attenuation tank active storage	2.00	m³	Existing design	
Attenuation tank control orifice	30.00	mm	Existing design	
Spreader effective length	23.00	m	Minimum effective length across contour	
Spreader pipe nominal diameter	100.00	mm	Rigid uPVC, centre-fed	
Perforation diameter	8.00	mm	Engineered outlet perforations	
Perforation spacing	250.00	mm	Uniform along full spreader length	
Orifice discharge coefficient (Cd)	0.62	-	Sharp-edged circular opening assumption	

2. GEOTECHNICAL LONG-TERM DISPERSAL LOADING CHECK

Check	Formula / Basis	Result	Units	Status
Annual roof runoff	A × MAR × C	166.25	m³/year	
Average daily runoff	Annual runoff / 365	455.48	L/day	
Allowable geotechnical loading	Geotechnical recommendation	20.00	L/day/m	
Required spreader length	Daily runoff / allowable loading	22.77	m	
Provided spreader length	Proposed design	23.00	m	
Actual loading	Daily runoff / provided length	19.80	L/day/m	
Geotechnical loading check	**Pass if actual loading ≤ allowable**	**PASS**		**PASS**

3. 1% AEP EMERGENCY FLOW CHECK

Check	Formula / Basis	Result	Units	Status
1% AEP peak roof inflow	Q = C i A / 3600	3.159	L/s	
Adopted emergency design flow	Use calculated 1% AEP roof inflow	3.159	L/s	
Half-flow to each side (centre-fed)	Q / 2	1.579	L/s	
DN100 velocity at centre	V = Q/A (indicative)	0.201	m/s	
Spreader arrangement	Centre-fed	11.5 m each side		
Emergency flow basis	Perforations sized to pass full 1% AEP inflow	1% AEP		

4. LEVEL SPREADER PERFORATION CAPACITY

Check	Formula / Basis	Result	Units	Acceptance
Number of perforations	Length / spacing	92.00	No.	-
Area per 8 mm hole	πd²/4	50.27	mm²	-
Total perforation area	No. holes × hole area	4624.42	mm²	-
Equivalent total opening diameter	Equivalent circular opening	76.73	mm	-
Required head to pass 1% AEP flow	Orifice equation using total opening area	61.86	mm	< DN100 nominal diameter (indicative)
Indicative DN100 friction loss – half spreader	Darcy-Weisbach, f=0.02, L=11.5 m	4.74	mm	Small relative to outlet head
Approx. total centre head	Outlet head + indicative friction loss	66.60	mm	< 100 mm
Average flow per perforation	Emergency flow / no. holes	0.03	L/s/hole	-
Perforation spacing	Design	250.00	mm	250 mm
Emergency capacity check	**Pass if approx. centre head < 100 mm**	**PASS**		
Normal operation note	**30 mm tank orifice remains primary flow control**	**30 mm control orifice upstream**		

Appendix C - Stormwater Layout Drawings

BG&E Consulting Limited (New Zealand)
8 Faraday St, Parnell Auckland 1052, New Zealand
auckland@bgeeng.com
+64 27 699 0794

NZBN 9429047746909

73a SIGNAL STATION ROAD
0473, SIGNAL STATION RD, OMAPERE NZ

FAR NORTH DISTRICT COUNCIL

FOR RESOURCE CONSENT

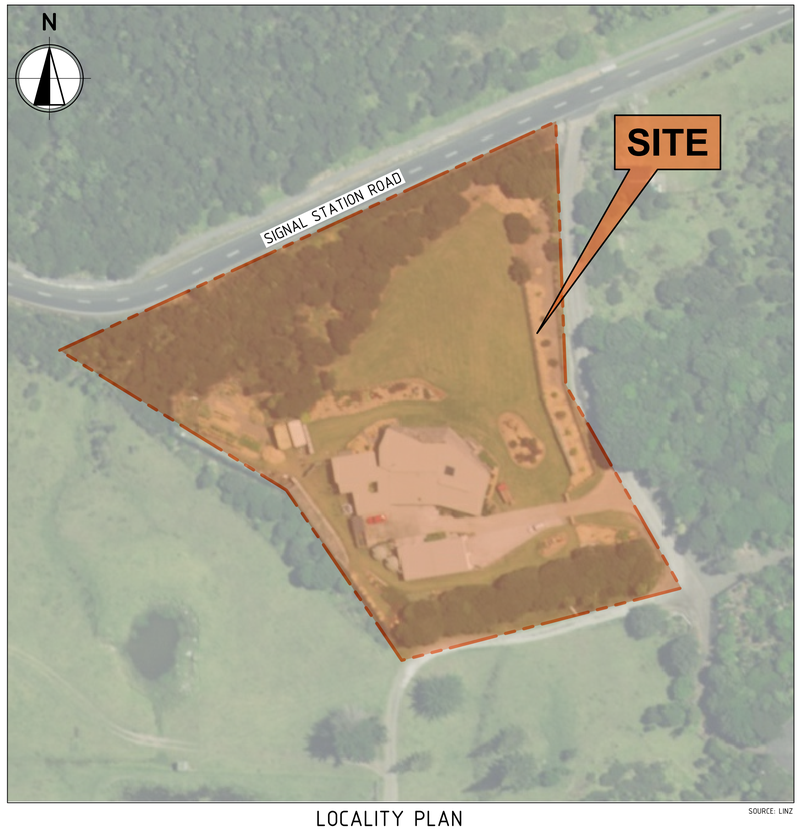

LOCALITY PLAN
SCALE 1:1000

SOURCE: LINZ

DRAWING INDEX	
DRAWING NO.	DRAWING TITLE
CI-0000	COVER SHEET, LOCALITY PLAN AND DRAWING INDEX
CI-0300	SITE FEATURES PLAN
CI-0301	PROPOSED SITEWORKS AND DRAINAGE PLAN SHEET 1 OF 2
CI-0302	PROPOSED SITEWORKS AND DRAINAGE PLAN SHEET 2 OF 2
CI-0380	DRAINAGE DETAILS SHEET 1 OF 3
CI-0381	DRAINAGE DETAILS SHEET 2 OF 3
CI-0382	DRAINAGE DETAILS SHEET 3 OF 3

0 10 20 30 40 50 60m
SCALE 1:1000 AT A1 SIZE

REV	DATE	DESCRIPTION	RVD
B	03.09.2026	ISSUED FOR RESORCE CONSENT AMENDMENT	SH
A	15.05.2026	ISSUED FOR RESOURCE CONSENT	SH

REVISIONS

REVISIONS

CLIENT

Auckland *Office* —
Studio 9/106 Saint Georges Bay Road, Parnell
Auckland 1023
P / 027 699 0794 *E* / auckland@bgeeng.com
bgeeng.com—

PROJECT
73a SIGNAL STATION ROAD
0473, SIGNAL STATION RD, OMAPERE NZ

STATUS
ISSUED FOR CONSENT
NOT TO BE USED FOR CONSTRUCTION

DRAWN	DESIGNED	CHECKED	APPROVED
NA	SM	SH	-

DATUM	GRID	SCALE
AHD	GDA2020 MGA-56	- AT A1 SIZE

TITLE
COVER SHEET, LOCALITY PLAN AND DRAWING INDEX

PROJECT No.	DRAWING No.	REV.
NZ26110	CI-0000	B

C:\USERS\MARK.DALIDA\DC\ACCDOCS\BG&E AU\URBAN CIVIL DRAFTING\PROJECT FILES\NZ26110 - 73A SSR\100 CIVIL\CAD\DRG\NZ26110-DRG-CI-0000.DWG
9/3/2026 9:13:11 AM

© BG&E Pty Limited

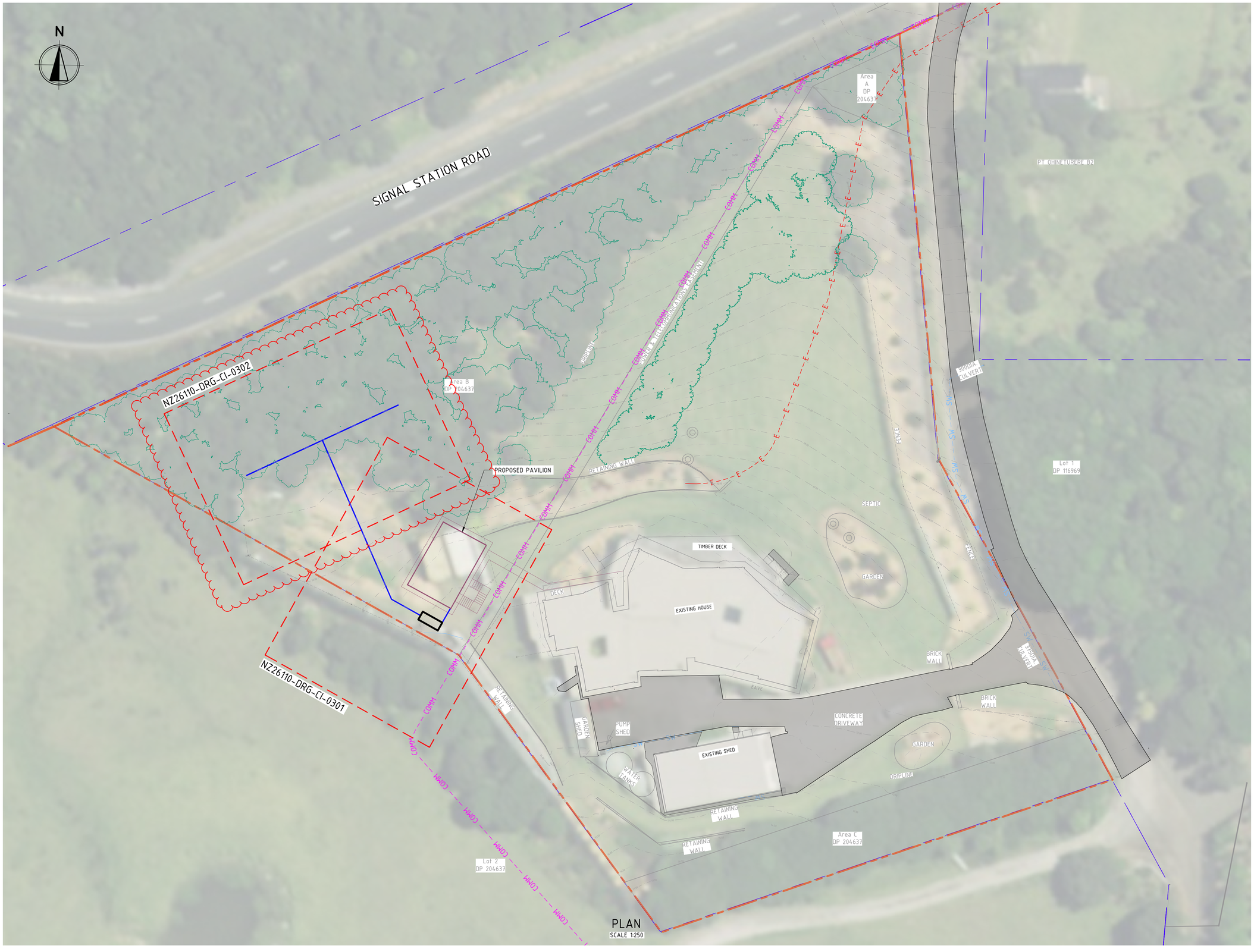

LEGEND

- SITE BOUNDARY
- LINZ BOUNDARY
- NEW PROPOSED BUILDINGS
- SURVEY
- EXISTING MINOR CONTOURS (27.00)
- EXISTING MAJOR CONTOURS (30.00)
- PROPOSED STORMWATER
- PROPOSED T-BAR DIFFUSER

EXISTING UTILITIES

- EXISTING STORMWATER PIPE (SW)
- EXISTING ELECTRICITY (E)
- EXISTING TELECOMMUNICATIONS (COMM)
- EXISTING EFFLUENT TRENCHES

NOTES

SURVEY / EXISTING SITE INFORMATION

1. EXISTING SITE INFORMATION SHOWN ON THESE DRAWINGS IS BASED ON TOPOGRAPHICAL SURVEY REF. 8683 PREPARED BY DONALDSONS REGISTERED LAND SURVEYORS.
2. ALL LEVELS ARE IN TERMS OF NEW ZEALAND VERTICAL DATUM 2016 (NZVD2016) UNLESS NOTED OTHERWISE.
3. EXISTING CONTOURS SHOWN ARE AT 0.5 m INTERVALS AND ARE BASED ON THE TOPOGRAPHICAL SURVEY.
4. THE CONTRACTOR SHALL VERIFY ALL EXISTING LEVELS, DIMENSIONS AND SITE CONDITIONS RELEVANT TO THE WORKS PRIOR TO COMMENCING CONSTRUCTION.
5. THE LOCATION AND LEVEL OF EXISTING SERVICES SHALL BE CONFIRMED ON SITE PRIOR TO EXCAVATION. EXISTING SERVICES SHOWN ARE INDICATIVE ONLY UNLESS SPECIFICALLY SURVEYED AND IDENTIFIED.
6. THE CONTRACTOR SHALL LOCATE AND PROTECT ALL EXISTING SERVICES, INCLUDING POWER, TELECOMMUNICATIONS, WATER, STORMWATER AND WASTEWATER INFRASTRUCTURE, DURING CONSTRUCTION.
7. NO WORKS SHALL ENCROACH WITHIN THE EASEMENT EXCEPT WHERE SPECIFICALLY SHOWN AND APPROVED.
8. EXISTING WATER TANKS, PUMP INFRASTRUCTURE AND ASSOCIATED PIPEWORK SHALL BE PROTECTED AND MAINTAINED OPERATIONAL UNLESS NOTED OTHERWISE.
9. ANY DISCREPANCIES BETWEEN THE SURVEY, DRAWINGS AND ACTUAL SITE CONDITIONS SHALL BE REPORTED TO THE ENGINEER PRIOR TO PROCEEDING WITH THE AFFECTED WORKS.
10. THE CONTRACTOR SHALL MINIMISE DISTURBANCE TO EXISTING VEGETATION AND LANDSCAPED AREAS AND REINSTATE ALL AREAS DISTURBED BY THE WORKS TO MATCH THE EXISTING CONDITION.

VEGETATION PROTECTION

NO CLEARANCE, REMOVAL, CUTTING, TRIMMING OR DAMAGE TO INDIGENOUS VEGETATION WITHIN AREAS A OR B IS PERMITTED. ALL WORKS SHALL BE UNDERTAKEN WITHOUT DISTURBANCE TO VEGETATION WITHIN THESE AREAS. THE CONTRACTOR SHALL NOTIFY THE ENGINEER PRIOR TO PROCEEDING WHERE THE WORKS CANNOT BE COMPLETED WITHOUT VEGETATION DISTURBANCE.

0 2.5 5.0 7.5 10 12.5 15m
SCALE 1:250 AT A1 SIZE

REV	DATE	DESCRIPTION	RVD
B	03.09.2026	ISSUED FOR RESORCE CONSENT AMENDMENT	SH
A	15.05.2026	ISSUED FOR RESOURCE CONSENT	SH

REVISIONS

CLIENT

Auckland *Office* —
Studio 9/106 Saint Georges Bay Road, Parnell
Auckland 1023
P / 027 699 0794 *E* / auckland@bgeeng.com
bgeeng.com—

PROJECT
73a SIGNAL STATION ROAD
0473, SIGNAL STATION RD, OMAPERE NZ

STATUS: ISSUED FOR CONSENT
NOT TO BE USED FOR CONSTRUCTION

DRAWN	DESIGNED	CHECKED	APPROVED
NA	SM	SH	-

DATUM	GRID	SCALE	
AHD	GDA2020 MGA-56	-	AT A1 SIZE

TITLE: SITE FEATURES PLAN

PROJECT No.	DRAWING No.	REV.
NZ26110	CI-0300	B

C:\USERS\MARK.DALIDA\DC\ACCDOCS\BG&E AU\URBAN CIVIL DRAFTING\PROJECT FILES\NZ26110 - 73A SSR\100 2 CIVIL\CAD\DRG\NZ26110-DRG-CI-0300.DWG
9/3/2026 9:31:59 AM

© BG&E Pty Limited

MATCHLINE REFER DRG NZ26110-CI-0302

TO DIFUSSER SEE DRAWING CI-0302

Ø100mm uPVC PIPE @MIN 1% GRADE

Ø100mm uPVC PIPE @MIN 1% GRADE

30mm CONTROLLED ORIFACEOUTLET
TO T-BAR DIFFUSER.
IL:70.65m

PROPOSED 3000L PROMAX UNDERGROUND WATER TANK OR SIMILAR APPROVED. COVER MIN 350mm AS PER MANUFACTURES SPECIFICATION.

BASE OF TANK RL: 70.50m
INLET FROM DOWNPIPE IL: 71.70 m

SEE DRAWING CI-0380 - CI 0381 FOR DETAILS

Ø100mm uPVC PIPE @MIN
1% GRADE

IL: 71.80

ALL NEW PAVILIILAN ROOF DOWNPIPES TO CONNECT TO PROPOSED ATTENUATION TANK. DOWNPIPE DESIGN BY OTHERS.
IL: 71.70

PROPOSED PAVILION

70.00 70.50 71.00 71.50 72.00 72.50 73.00 69.00 68.50 71.00 72.00

SW SW SW SW SW

COMM COMM COMM

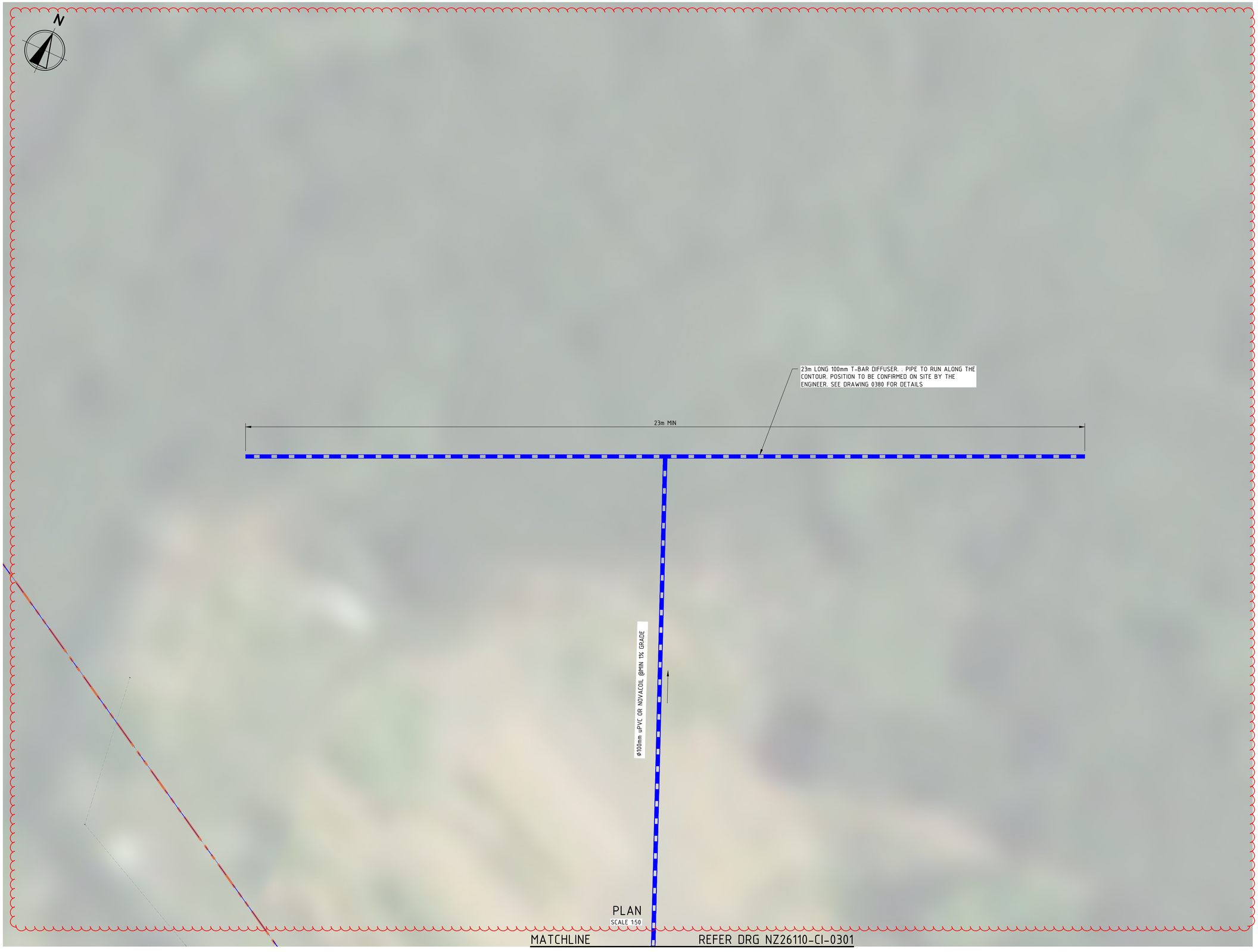

PLAN
SCALE 1:50

LEGEND

- SITE BOUNDARY
- LINZ BOUNDARY
- NEW PROPOSED BUILDINGS
- SURVEY
- EXISTING MINOR CONTOURS
- EXISTING MAJOR CONTOURS
- PROPOSED STORMWATER
- PROPOSED T-BAR DIFFUSER

EXISTING UTILITIES

- EXISTING STORMWATER PIPE
- EXISTING ELECTRICITY
- EXISTING TELECOMMUNICATIONS
- EXISTING EFFLUENT TRENCHES

NOTES

STORMWATER PIPEWORK

1. STORMWATER PIPEWORK TO BE INSTALLED GENERALLY IN ACCORDANCE WITH NZBC E1/AS1.
2. STORMWATER PIPEWORK TO COMPRISE 100mm SN8 uPVC PIPE UNLESS NOTED OTHERWISE.
3. STORMWATER PIPES TO BE LAID AT MINIMUM GRADES SHOWN ON PLAN.
4. PROVIDE INSPECTION POINTS AT CHANGES IN DIRECTION AND JUNCTIONS AS REQUIRED.
5. ALL PIPES TO DISCHARGE FREELY WITHOUT SURCHARGE UNDER NORMAL OPERATING CONDITIONS.
6. PIPE BEDDING AND BACKFILL TO COMPLY WITH NZS 4404 AND MANUFACTURER REQUIREMENTS.
7. PROTECT PIPEWORK FROM SEDIMENT INGRESS DURING CONSTRUCTION.
8. ALL ROOF DOWNPIPES TO DISCHARGE TO SEALED STORMWATER PIPE SYSTEM.
9. PROVIDE MINIMUM 300mm COVER TO STORMWATER PIPEWORK IN NON-TRAFFICABLE / LANDSCAPED AREAS UNLESS NOTED OTHERWISE.

VEGETATION PROTECTION

NO CLEARANCE, REMOVAL, CUTTING, TRIMMING OR DAMAGE TO INDIGENOUS VEGETATION WITHIN AREAS A OR B IS PERMITTED. ALL WORKS SHALL BE UNDERTAKEN WITHOUT DISTURBANCE TO VEGETATION WITHIN THESE AREAS. THE CONTRACTOR SHALL NOTIFY THE ENGINEER PRIOR TO PROCEEDING WHERE THE WORKS CANNOT BE COMPLETED WITHOUT VEGETATION DISTURBANCE.

0 0.5 1.0 1.5 2.0 2.5 3.0m
SCALE 1:50 AT A1 SIZE

REV	DATE	DESCRIPTION	RVD
B	03.09.2026	ISSUED FOR RESORCE CONSENT AMENDMENT	SH
A	15.05.2026	ISSUED FOR RESOURCE CONSENT	SH

REVISIONS

REVISIONS

CLIENT

Auckland *Office* —
Studio 9/106 Saint Georges Bay Road, Parnell
Auckland 1023
P / 027 699 0794 *E* / auckland@bgeeng.com
bgeeng.com—

PROJECT
73a SIGNAL STATION ROAD
0473, SIGNAL STATION RD, OMAPERE NZ

STATUS
ISSUED FOR CONSENT
NOT TO BE USED FOR CONSTRUCTION

DRAWN	DESIGNED	CHECKED	APPROVED
NA	SM	SH	-

DATUM: AHD GDA2020 MGA-56 | GRID: - | SCALE: - AT A1 SIZE

TITLE
PROPOSED SITEWORKS AND DRAINAGE PLAN SHEET 2 OF 2

PROJECT No. NZ26110 | DRAWING No. CI-0302 | REV. B

C:\USERS\MARK.DALIDA\DC\ACCDOCS\BG&E AUT\URBAN CIVIL DRAFTING\PROJECT FILES\NZ26110 - 73A SSR\100.2 CIVIL\CAD\DRG\NZ26110-DRG-CI-0302.DWG
9/3/2026 9:31:07 AM

© BG&E Pty Limited

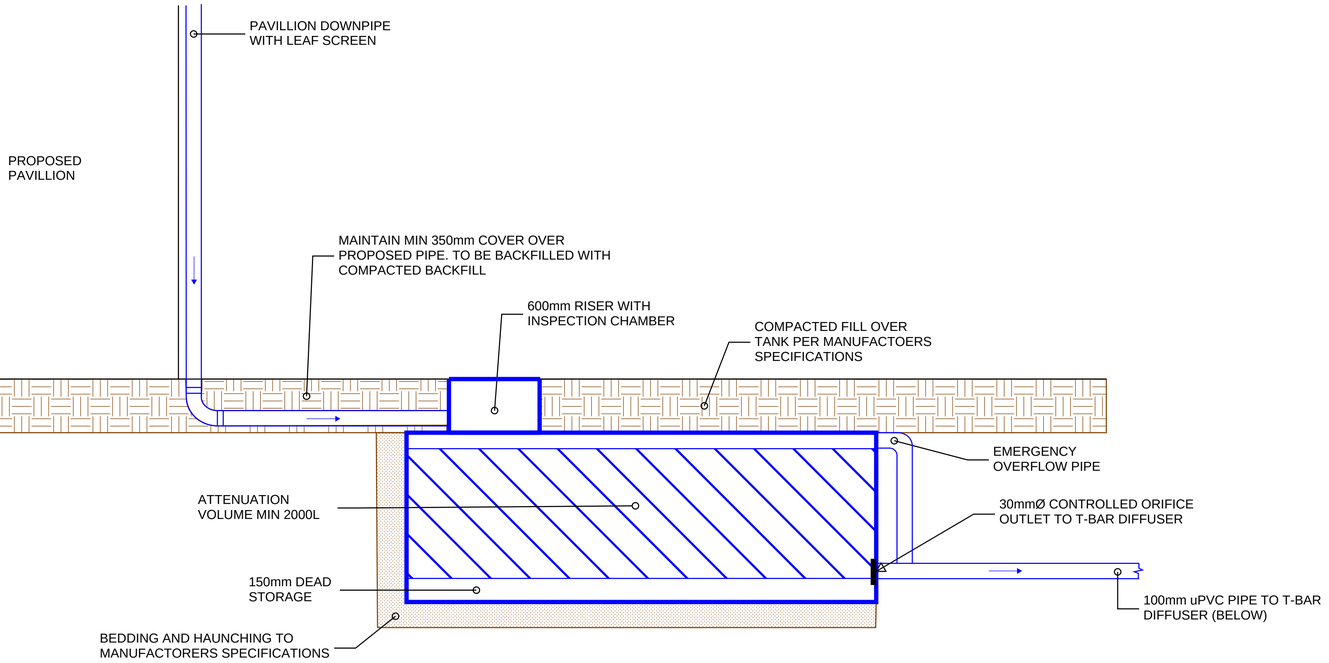

01 / 0300 ATTENUATION TANK TYPICAL DETAIL

NOT TO SCALE

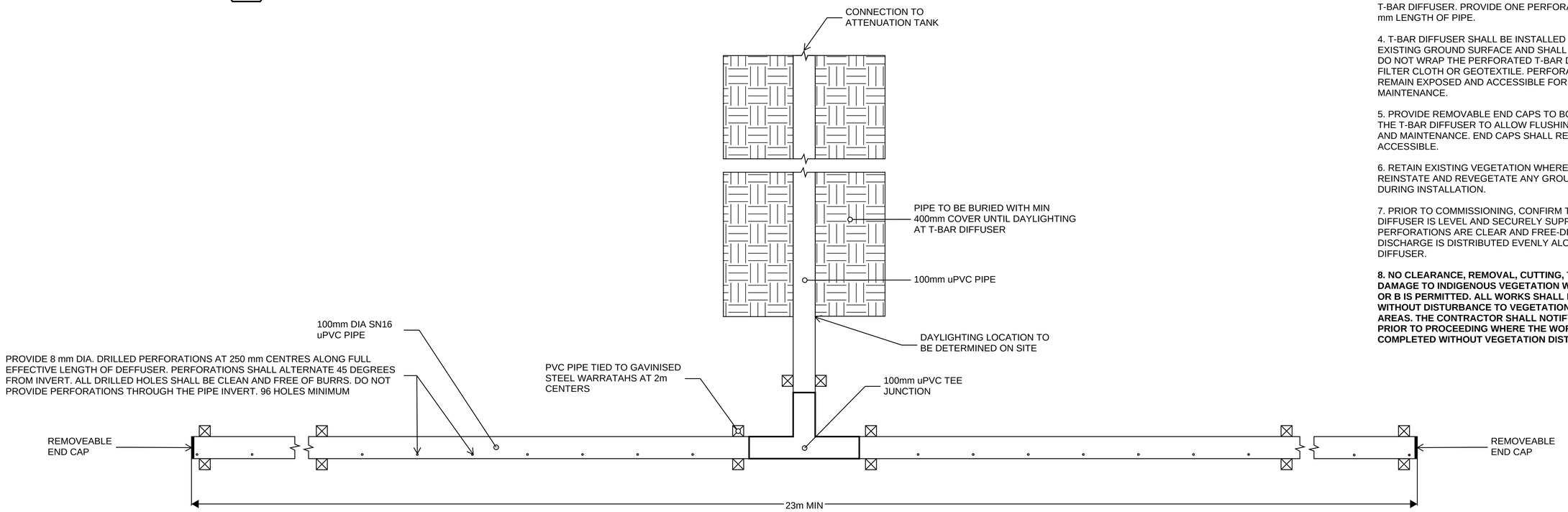

02 / 0300 T-BAR DIFFUSER DETAIL

NOT TO SCALE

NOTES

ATTENUATION TANK

1. PROVIDE 2,000 L MINIMUM EFFECTIVE STORMWATER ATTENUATION STORAGE VOLUME.

2. ATTENUATION TANK TO RECEIVE RUNOFF FROM PROPOSED PAVILION ROOF DRAINAGE SYSTEM ONLY.

3. ORIFICE INVERT TO BE MIN 150mm FROM BASE OF TANK TO ALLOW FOR SLUDGE ZONE.

4. ORIFICE PLATE TO BE SECURELY FIXED AND ACCESSIBLE FOR MAINTENANCE AND INSPECTION.

5. TANK AND ASSOCIATED PIPEWORK TO BE INSTALLED IN ACCORDANCE WITH MANUFACTURER'S RECOMMENDATIONS.

6. PROVIDE ACCESS FOR INSPECTION AND MAINTENANCE OF ATTENUATION TANK AND OUTLET CONTROL.

7. ALL PIPE PENETRATIONS TO BE WATERTIGHT.

8. TANK LOCATION AND FINISHED LEVELS TO BE COORDINATED WITH ARCHITECTURAL AND SITE GRADING REQUIREMENTS.

9. CONTRACTOR TO CONFIRM ALL EXISTING UNDERGROUND SERVICES PRIOR TO EXCAVATION.

T-BAR DIFFUSER

1. PROVIDE MINIMUM 23 m LONG DN100 SN16 uPVC ABOVE-GROUND T-BAR STORMWATER DIFFUSER, CENTRE-FED AS SHOWN.

2. T-BAR DIFFUSER SHALL BE INSTALLED GENERALLY PARALLEL TO THE EXISTING GROUND CONTOURS AND LEVEL ALONG ITS FULL EFFECTIVE LENGTH.

3. PROVIDE 8 mm DIA. DRILLED PERFORATIONS AT 250 mm CENTRES ALONG THE FULL EFFECTIVE LENGTH OF THE T-BAR DIFFUSER. PROVIDE ONE PERFORATION PER 250 mm LENGTH OF PIPE.

4. T-BAR DIFFUSER SHALL BE INSTALLED ABOVE THE EXISTING GROUND SURFACE AND SHALL NOT BE BURIED. DO NOT WRAP THE PERFORATED T-BAR DIFFUSER PIPE IN FILTER CLOTH OR GEOTEXTILE. PERFORATIONS SHALL REMAIN EXPOSED AND ACCESSIBLE FOR INSPECTION AND MAINTENANCE.

5. PROVIDE REMOVABLE END CAPS TO BOTH ENDS OF THE T-BAR DIFFUSER TO ALLOW FLUSHING, INSPECTION AND MAINTENANCE. END CAPS SHALL REMAIN ACCESSIBLE.

6. RETAIN EXISTING VEGETATION WHERE PRACTICABLE. REINSTATE AND REVEGETATE ANY GROUND DISTURBED DURING INSTALLATION.

7. PRIOR TO COMMISSIONING, CONFIRM THE T-BAR DIFFUSER IS LEVEL AND SECURELY SUPPORTED, ALL PERFORATIONS ARE CLEAR AND FREE-DRAINING, AND DISCHARGE IS DISTRIBUTED EVENLY ALONG THE DIFFUSER.

8. NO CLEARANCE, REMOVAL, CUTTING, TRIMMING OR DAMAGE TO INDIGENOUS VEGETATION WITHIN AREAS A OR B IS PERMITTED. ALL WORKS SHALL BE UNDERTAKEN WITHOUT DISTURBANCE TO VEGETATION WITHIN THESE AREAS. THE CONTRACTOR SHALL NOTIFY THE ENGINEER PRIOR TO PROCEEDING WHERE THE WORKS CANNOT BE COMPLETED WITHOUT VEGETATION DISTURBANCE.

REV	DATE	DESCRIPTION	RVD
B	03.09.2026	ISSUED FOR RESORCE CONSENT AMENDMENT	SH
A	15.05.2026	ISSUED FOR RESOURCE CONSENT	SH

REVISIONS

REV	DATE	DESCRIPTION	RVD

REVISIONS

CLIENT

Auckland *Office* —
Studio 9/106 Saint Georges Bay Road, Parnell
Auckland 1023
P / 027 699 0794 *E* / auckland@bgeeng.com
bgeeng.com—

PROJECT

73a SIGNAL STATION ROAD
0473, SIGNAL STATION RD, OMAPERE NZ

STATUS: ISSUED FOR CONSENT
NOT TO BE USED FOR CONSTRUCTION

DRAWN	DESIGNED	CHECKED	APPROVED
NA	SM	SH	-

DATUM	GRID	SCALE
AHD	GDA2020 MGA-S56	- AT A1 SIZE

TITLE: DRAINAGE DETAILS
SHEET 1 OF 3

PROJECT No.	DRAWING No.	REV.
NZ26110	CI-0380	B

C:\USERS\MARK.DALDA\DC\ACCDOCS\BG&E AU\URBAN CIVIL DRAFTING\PROJECT FILES\NZ26110 - 73A SSR\100 CIVIL\CAD\DRG\NZ26110-DRG-CI-0380.DWG
9/3/2026 9:16:20 AM

© BG&E Pty Limited

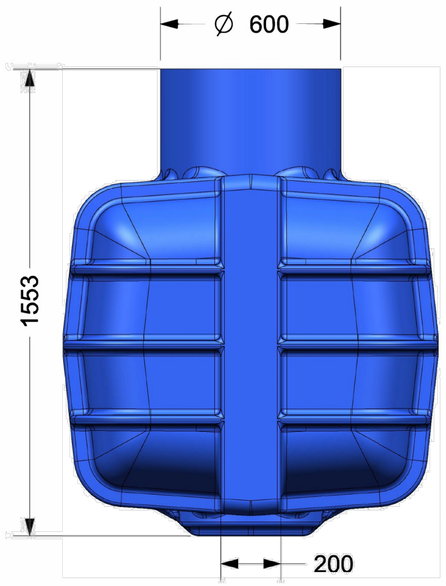

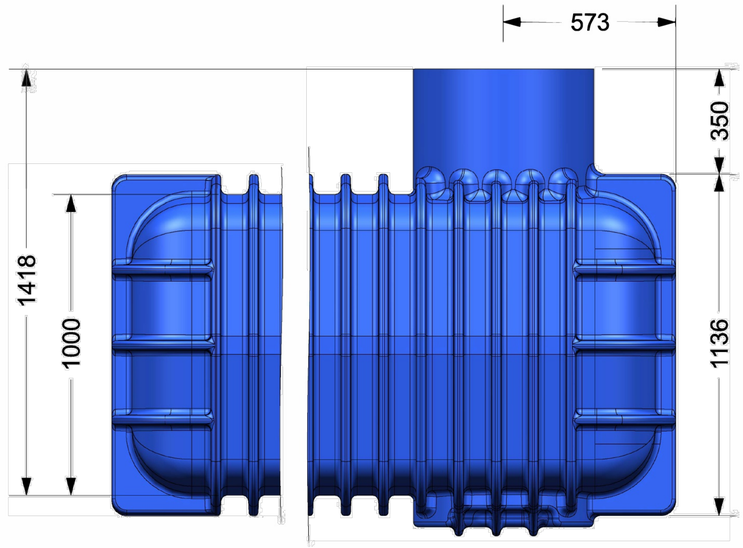

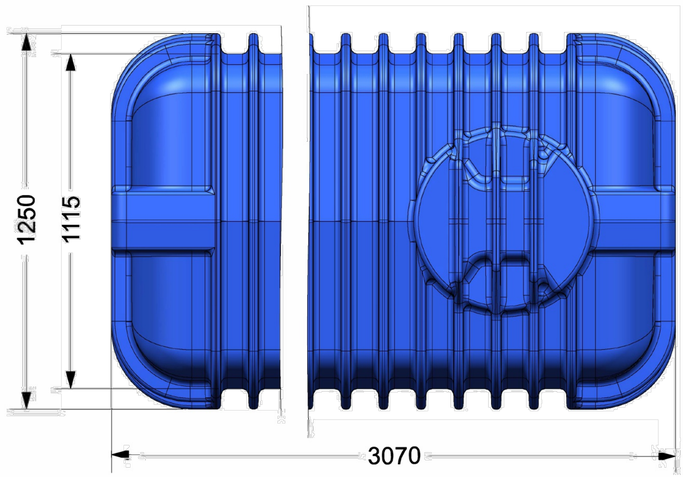

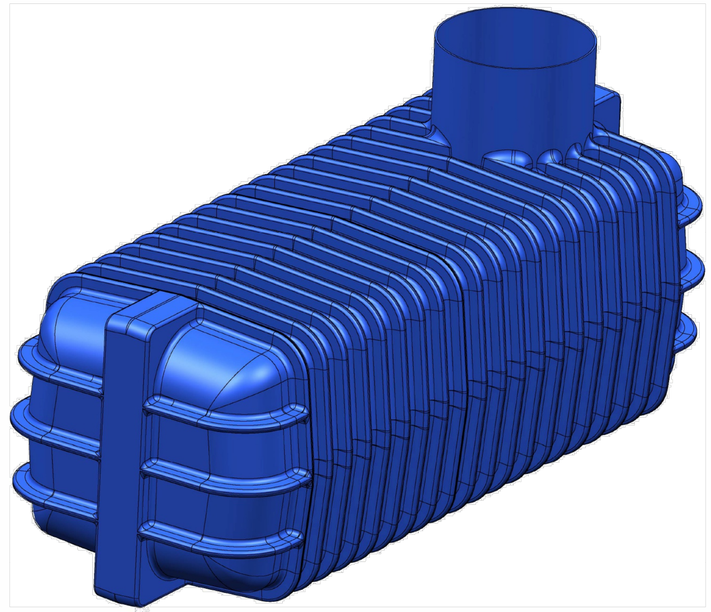

Promax

LIQUID MANAGEMENT SOLUTIONS

THIS DOCUMENT (AND THE INFORMATION SHOWN THEREON) IS CONFIDENTAL AND PROPRIETARY AND SHALL NOT BE DISCLOSED TO OTHERS IN HARD COPY OR ELECTRONIC FORM. REPRODUCED BY ANY MEANS, OR USED FOR ANY PURPOSE WITHOUT WRITTER CONSENT OF PROMAX PLASTICS LIMITED.

UNLESS OTHERWISE SPECIFIEDTHE INFORMATION WITHIN THIS TITLE BLOCK SHALL APPLY

-

DIMENSIONS ARE IN: MM
UNSPECIFIED DIMS IN 3D
** DIMENSIONS FOR REFERENCE*

CAGE CODE -

MATERIAL -

FINISH -

DES BY	A.P.	08 JUN 2021
DRAWN BY		
CHECK BY		
APPR BY	J. A.	08 JUN 2021

TITLE

Promax Enduro Underground Tank - 3000L

SIZE	DWG NO	REV
A3	UE1003000	-

SCALE 1:18 | MASS UNSP | SHEET 1 OF 1

REV	DATE	DESCRIPTION	RVD
B	03.09.2026	ISSUED FOR RESORCE CONSENT AMENDMENT	SH
A	15.05.2026	ISSUED FOR RESOURCE CONSENT	SH

REVISIONS

REVISIONS

CLIENT

Auckland *Office* —
Studio 9/106 Saint Georges Bay Road, Parnell
Auckland 1023
P / 027 699 0794 *E* / auckland@bgeeng.com
bgeeng.com—

PROJECT

73a SIGNAL STATION ROAD
0473, SIGNAL STATION RD, OMAPERE NZ

STATUS: ISSUED FOR CONSENT
NOT TO BE USED FOR CONSTRUCTION

DRAWN	DESIGNED	CHECKED	APPROVED
NA	SM	SH	-

DATUM AHD GDA2020 MGA-56 | GRID | SCALE - AT A1 SIZE

TITLE: DRAINAGE DETAILS
SHEET 2 OF 3

PROJECT No.	DRAWING No.	REV.
NZ26110	CI-0381	B

C:\USERS\MARK.DALDA\DC\ACCDOCS\BG&E AU\URBAN CIVIL DRAFTING\PROJECT FILES\NZ26110 - 73A SSR\100.2 CIVIL\CAD\ORD\NZ26110-ORG-CI-0381.DWG
9/3/2026 9:16:43 AM

© BG&E Pty Limited

Figure 8: Relationship of pipe trench to building foundation
Paragraph 5.6.1

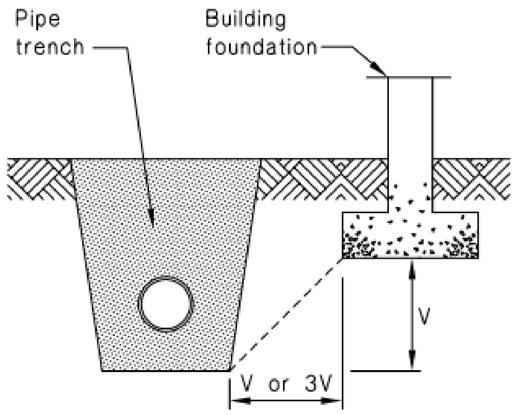

Minimum horizontal seperation shall be V or 3V dependant on length of time trench open, see Paragraph 5.6.1

Figure 9: Inspection points
Paragraph 5.7.3

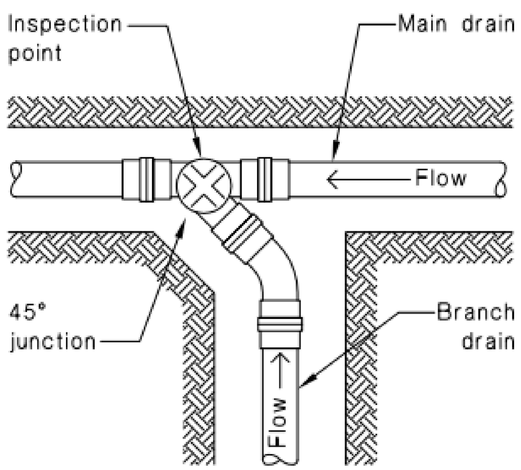

Figure 7: Bedding and backfilling
Paragraphs 2.1.1, 5.2.1, 5.3.1 and 5.4.1

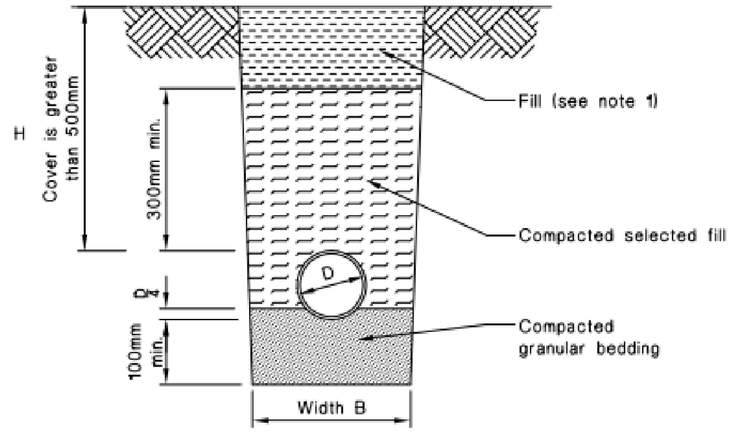

(a) Cover greater than 500 mm

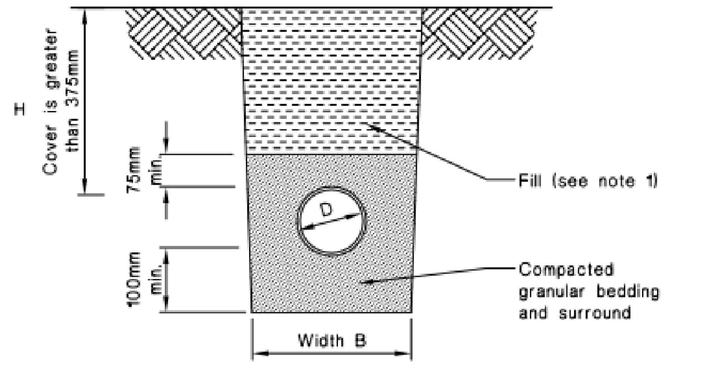

(b) Cover greater than 375 mm

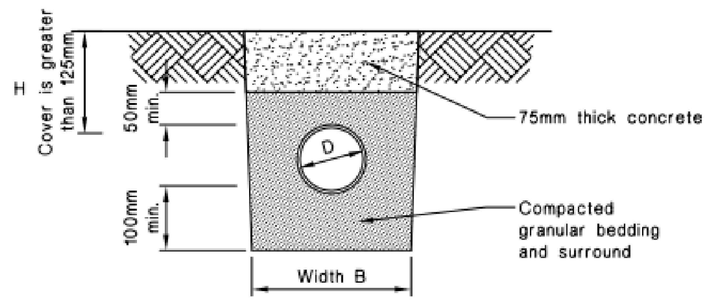

(c) Cover greater than 125 mm

NOTE:
1. Fill shall be:
-Ordinary fill where drains are located below gardens and open country.
-Compacted selected fill where the drains are located below residential driveways and similar areas subject to light traffic.

REV	DATE	DESCRIPTION	RVD
B	03.09.2026	ISSUED FOR RESORCE CONSENT AMENDMENT	SH
A	15.05.2026	ISSUED FOR RESOURCE CONSENT	SH

REVISIONS

Auckland *Office* —
Studio 9/106 Saint Georges Bay Road, Parnell
Auckland 1023
P / 027 699 0794 *E* / auckland@bgeeng.com
bgeeng.com—

PROJECT: 73a SIGNAL STATION ROAD
0473, SIGNAL STATION RD, OMAPERE NZ

STATUS: ISSUED FOR CONSENT
NOT TO BE USED FOR CONSTRUCTION

DRAWN	DESIGNED	CHECKED	APPROVED
NA	SM	SH	–

DATUM	GRID	SCALE
AHD	GDA2020 MGA-56	– AT A1 SIZE

TITLE: DRAINAGE DETAILS SHEET 3 OF 3

PROJECT No.	DRAWING No.	REV.
NZ26110	CI-0382	B

C:\USERS\MARK.DALGIA\DC\ACCDOCS\BG&E AU\URBAN CIVIL DRAFTING\PROJECT FILES\NZ26110 - 73A SSR\100 2 CIVIL\CAD\DRG\NZ26110-DRG-CI-0382.DWG
9/3/2026 9:16:59 AM

© BG&E Pty Limited

73a SIGNAL STATION ROAD
0473, SIGNAL STATION RD, OMAPERE NZ

FAR NORTH DISTRICT COUNCIL

FOR RESOURCE CONSENT

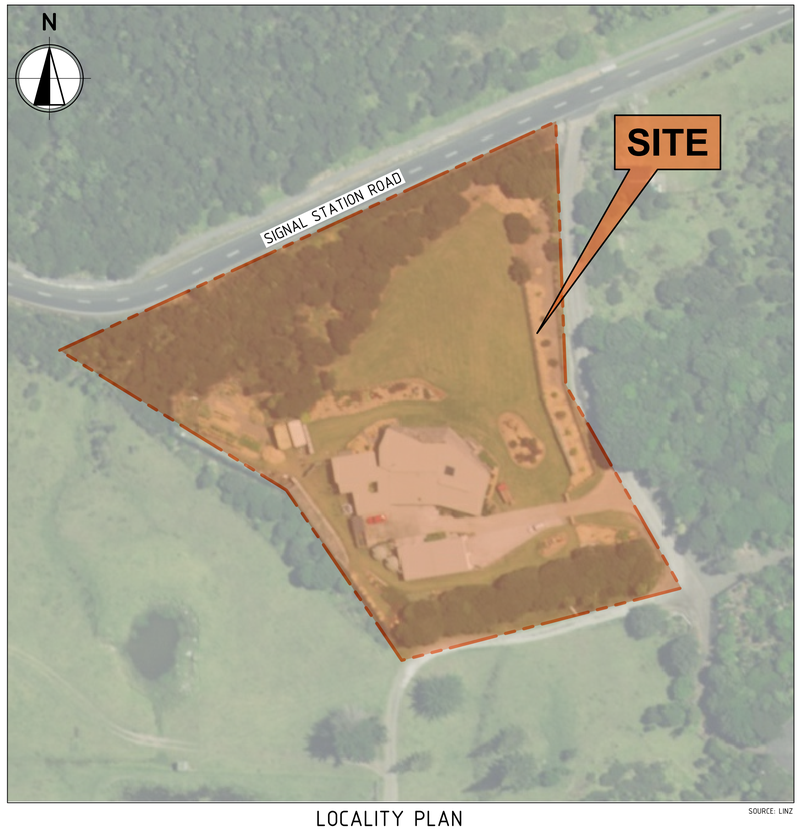

LOCALITY PLAN
SCALE 1:1000

SOURCE: LINZ

DRAWING INDEX	
DRAWING NO.	DRAWING TITLE
CI-0000	COVER SHEET, LOCALITY PLAN AND DRAWING INDEX
CI-0300	SITE FEATURES PLAN
CI-0301	PROPOSED SITEWORKS AND DRAINAGE PLAN SHEET 1 OF 2
CI-0302	PROPOSED SITEWORKS AND DRAINAGE PLAN SHEET 2 OF 2
CI-0380	DRAINAGE DETAILS SHEET 1 OF 3
CI-0381	DRAINAGE DETAILS SHEET 2 OF 3
CI-0382	DRAINAGE DETAILS SHEET 3 OF 3

0 10 20 30 40 50 60m
SCALE 1:1000 AT A1 SIZE

REV	DATE	DESCRIPTION	RVD
B	03.09.2026	ISSUED FOR RESORCE CONSENT AMENDMENT	SH
A	15.05.2026	ISSUED FOR RESOURCE CONSENT	SH

REVISIONS

REVISIONS

CLIENT

Auckland *Office* —
Studio 9/106 Saint Georges Bay Road, Parnell
Auckland 1023
P / 027 699 0794 *E* / auckland@bgeeng.com
bgeeng.com—

PROJECT
73a SIGNAL STATION ROAD
0473, SIGNAL STATION RD, OMAPERE NZ

STATUS
ISSUED FOR CONSENT
NOT TO BE USED FOR CONSTRUCTION

DRAWN	DESIGNED	CHECKED	APPROVED
NA	SM	SH	-

DATUM	GRID	SCALE
AHD	GDA2020 MGA-56	- AT A1 SIZE

TITLE
COVER SHEET, LOCALITY PLAN AND DRAWING INDEX

PROJECT No.	DRAWING No.	REV.
NZ26110	CI-0000	B

C:\USERS\MARK.DALIDA\DC\ACCDOCS\BG&E AU\URBAN CIVIL DRAFTING\PROJECT FILES\NZ26110 - 73A SSR\100 CIVIL\CAD\DRG\NZ26110-DRG-CI-0000.DWG
9/3/2026 9:13:11 AM

© BG&E Pty Limited

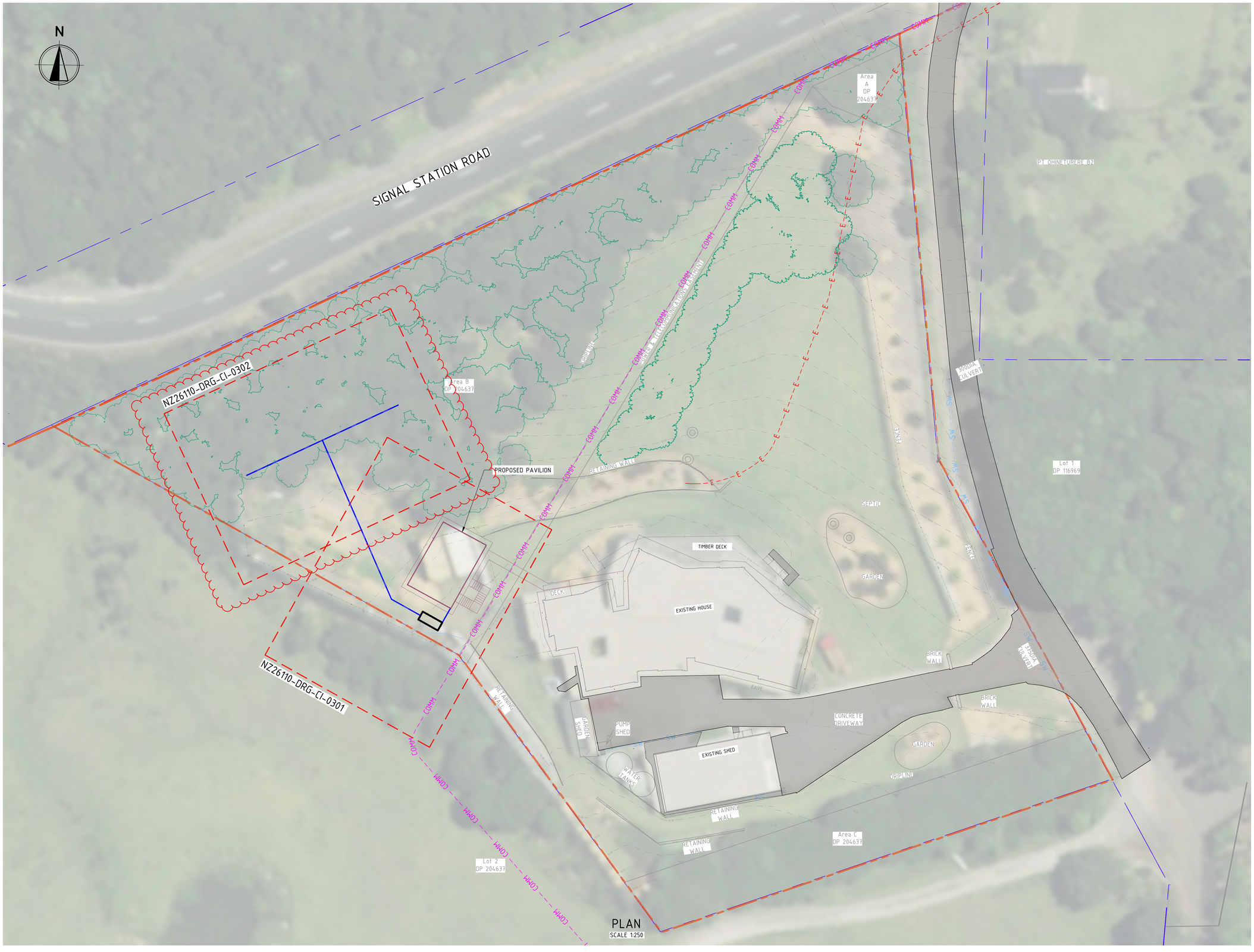

LEGEND

- SITE BOUNDARY
- LINZ BOUNDARY
- NEW PROPOSED BUILDINGS
- SURVEY
- EXISTING MINOR CONTOURS (27.00)
- EXISTING MAJOR CONTOURS (30.00)
- PROPOSED STORMWATER
- PROPOSED T-BAR DIFFUSER

EXISTING UTILITIES

- EXISTING STORMWATER PIPE (SW)
- EXISTING ELECTRICITY (E)
- EXISTING TELECOMMUNICATIONS (COMM)
- EXISTING EFFLUENT TRENCHES

NOTES

SURVEY / EXISTING SITE INFORMATION

1. EXISTING SITE INFORMATION SHOWN ON THESE DRAWINGS IS BASED ON TOPOGRAPHICAL SURVEY REF. 8683 PREPARED BY DONALDSONS REGISTERED LAND SURVEYORS.
2. ALL LEVELS ARE IN TERMS OF NEW ZEALAND VERTICAL DATUM 2016 (NZVD2016) UNLESS NOTED OTHERWISE.
3. EXISTING CONTOURS SHOWN ARE AT 0.5 m INTERVALS AND ARE BASED ON THE TOPOGRAPHICAL SURVEY.
4. THE CONTRACTOR SHALL VERIFY ALL EXISTING LEVELS, DIMENSIONS AND SITE CONDITIONS RELEVANT TO THE WORKS PRIOR TO COMMENCING CONSTRUCTION.
5. THE LOCATION AND LEVEL OF EXISTING SERVICES SHALL BE CONFIRMED ON SITE PRIOR TO EXCAVATION. EXISTING SERVICES SHOWN ARE INDICATIVE ONLY UNLESS SPECIFICALLY SURVEYED AND IDENTIFIED.
6. THE CONTRACTOR SHALL LOCATE AND PROTECT ALL EXISTING SERVICES, INCLUDING POWER, TELECOMMUNICATIONS, WATER, STORMWATER AND WASTEWATER INFRASTRUCTURE, DURING CONSTRUCTION.
7. NO WORKS SHALL ENCROACH WITHIN THE EASEMENT EXCEPT WHERE SPECIFICALLY SHOWN AND APPROVED.
8. EXISTING WATER TANKS, PUMP INFRASTRUCTURE AND ASSOCIATED PIPEWORK SHALL BE PROTECTED AND MAINTAINED OPERATIONAL UNLESS NOTED OTHERWISE.
9. ANY DISCREPANCIES BETWEEN THE SURVEY, DRAWINGS AND ACTUAL SITE CONDITIONS SHALL BE REPORTED TO THE ENGINEER PRIOR TO PROCEEDING WITH THE AFFECTED WORKS.
10. THE CONTRACTOR SHALL MINIMISE DISTURBANCE TO EXISTING VEGETATION AND LANDSCAPED AREAS AND REINSTATE ALL AREAS DISTURBED BY THE WORKS TO MATCH THE EXISTING CONDITION.

VEGETATION PROTECTION

NO CLEARANCE, REMOVAL, CUTTING, TRIMMING OR DAMAGE TO INDIGENOUS VEGETATION WITHIN AREAS A OR B IS PERMITTED. ALL WORKS SHALL BE UNDERTAKEN WITHOUT DISTURBANCE TO VEGETATION WITHIN THESE AREAS. THE CONTRACTOR SHALL NOTIFY THE ENGINEER PRIOR TO PROCEEDING WHERE THE WORKS CANNOT BE COMPLETED WITHOUT VEGETATION DISTURBANCE.

0 2.5 5.0 7.5 10 12.5 15m
SCALE 1:250 AT A1 SIZE

REV	DATE	DESCRIPTION	RVD
B	03.09.2026	ISSUED FOR RESORCE CONSENT AMENDMENT	SH
A	15.05.2026	ISSUED FOR RESOURCE CONSENT	SH

REVISIONS

CLIENT

Auckland *Office* —
Studio 9/106 Saint Georges Bay Road, Parnell
Auckland 1023
P / 027 699 0794 *E* / auckland@bgeeng.com
bgeeng.com—

PROJECT
73a SIGNAL STATION ROAD
0473, SIGNAL STATION RD, OMAPERE NZ

STATUS: ISSUED FOR CONSENT
NOT TO BE USED FOR CONSTRUCTION

DRAWN	DESIGNED	CHECKED	APPROVED
NA	SM	SH	-

DATUM	GRID	SCALE	
AHD	GDA2020 MGA-56	-	AT A1 SIZE

TITLE: SITE FEATURES PLAN

PROJECT No.	DRAWING No.	REV.
NZ26110	CI-0300	B

C:\USERS\MARK.DALIDA\DC\ACCDOCS\BG&E AU\URBAN CIVIL DRAFTING\PROJECT FILES\NZ26110 - 73A SSR\100 2 CIVIL\CAD\DRG\NZ26110-DRG-CI-0300.DWG
9/3/2026 9:31:59 AM

© BG&E Pty Limited

MATCHLINE REFER DRG NZ26110-CI-0302

TO DIFUSSER SEE DRAWING CI-0302

Ø100mm uPVC PIPE @MIN 1% GRADE

Ø100mm uPVC PIPE @MIN 1% GRADE

30mm CONTROLLED ORIFACEOUTLET
TO T-BAR DIFFUSER.
IL:70.65m

PROPOSED 3000L PROMAX UNDERGROUND WATER TANK OR SIMILAR APPROVED. COVER MIN 350mm AS PER MANUFACTURES SPECIFICATION.

BASE OF TANK RL: 70.50m
INLET FROM DOWNPIPE IL: 71.70 m

SEE DRAWING CI-0380 - CI 0381 FOR DETAILS

Ø100mm uPVC PIPE @MIN
1% GRADE

IL: 71.80

ALL NEW PAVILIILAN ROOF DOWNPIPES TO CONNECT TO PROPOSED ATTENUATION TANK. DOWNPIPE DESIGN BY OTHERS.
IL: 71.70

PROPOSED PAVILION

70.00 70.50 71.00 71.50 72.00 72.50 73.00 69.00 68.50 71.00 72.00

SW SW SW SW SW

COMM COMM COMM

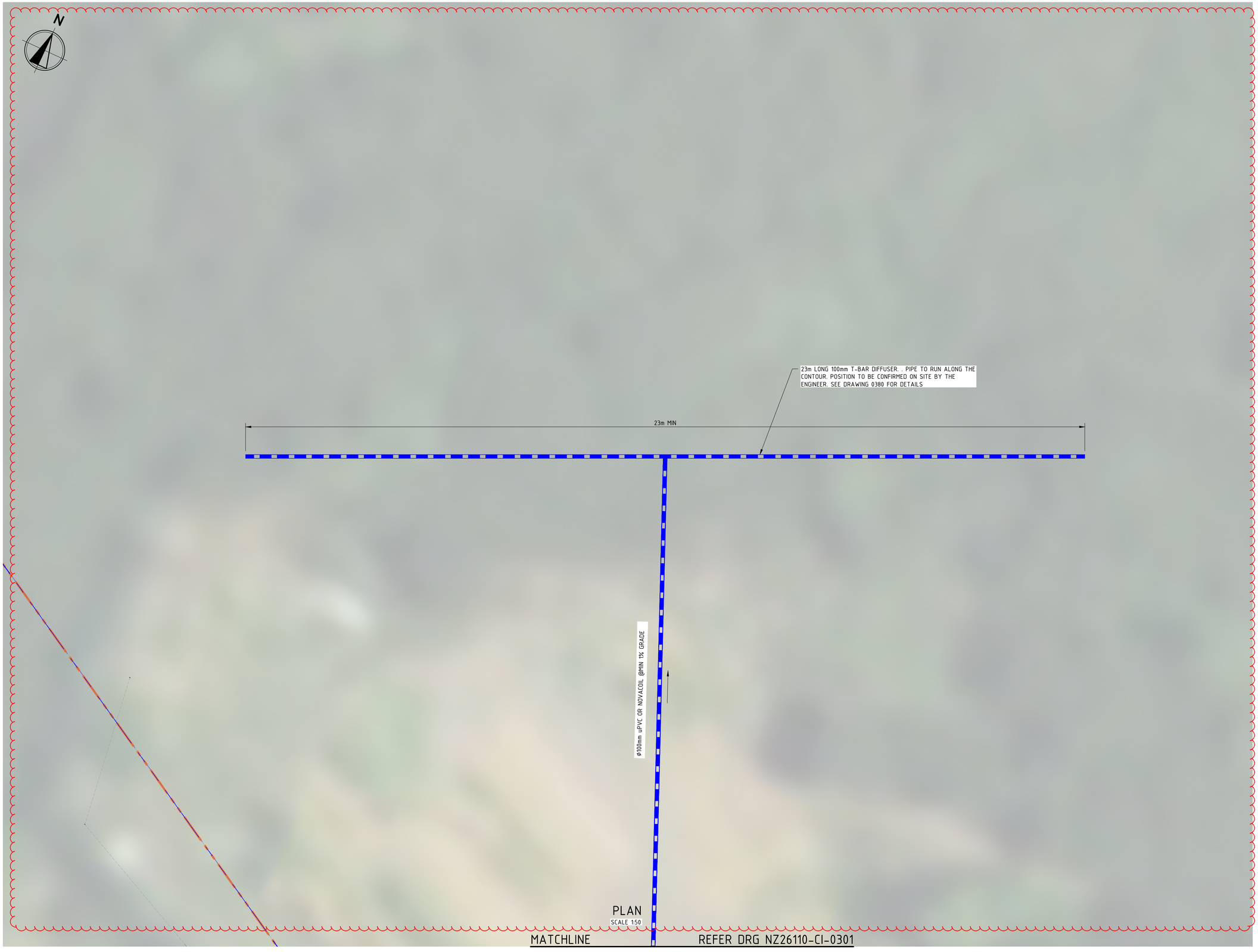

PLAN
SCALE 1:50

LEGEND

- SITE BOUNDARY
- LINZ BOUNDARY
- NEW PROPOSED BUILDINGS
- SURVEY
- EXISTING MINOR CONTOURS
- EXISTING MAJOR CONTOURS
- PROPOSED STORMWATER
- PROPOSED T-BAR DIFFUSER

EXISTING UTILITIES

- EXISTING STORMWATER PIPE
- EXISTING ELECTRICITY
- EXISTING TELECOMMUNICATIONS
- EXISTING EFFLUENT TRENCHES

NOTES

STORMWATER PIPEWORK

1. STORMWATER PIPEWORK TO BE INSTALLED GENERALLY IN ACCORDANCE WITH NZBC E1/AS1.
2. STORMWATER PIPEWORK TO COMPRISE 100mm SN8 uPVC PIPE UNLESS NOTED OTHERWISE.
3. STORMWATER PIPES TO BE LAID AT MINIMUM GRADES SHOWN ON PLAN.
4. PROVIDE INSPECTION POINTS AT CHANGES IN DIRECTION AND JUNCTIONS AS REQUIRED.
5. ALL PIPES TO DISCHARGE FREELY WITHOUT SURCHARGE UNDER NORMAL OPERATING CONDITIONS.
6. PIPE BEDDING AND BACKFILL TO COMPLY WITH NZS 4404 AND MANUFACTURER REQUIREMENTS.
7. PROTECT PIPEWORK FROM SEDIMENT INGRESS DURING CONSTRUCTION.
8. ALL ROOF DOWNPIPES TO DISCHARGE TO SEALED STORMWATER PIPE SYSTEM.
9. PROVIDE MINIMUM 300mm COVER TO STORMWATER PIPEWORK IN NON-TRAFFICABLE / LANDSCAPED AREAS UNLESS NOTED OTHERWISE.

VEGETATION PROTECTION

NO CLEARANCE, REMOVAL, CUTTING, TRIMMING OR DAMAGE TO INDIGENOUS VEGETATION WITHIN AREAS A OR B IS PERMITTED. ALL WORKS SHALL BE UNDERTAKEN WITHOUT DISTURBANCE TO VEGETATION WITHIN THESE AREAS. THE CONTRACTOR SHALL NOTIFY THE ENGINEER PRIOR TO PROCEEDING WHERE THE WORKS CANNOT BE COMPLETED WITHOUT VEGETATION DISTURBANCE.

0 0.5 1.0 1.5 2.0 2.5 3.0m
SCALE 1:50 AT A1 SIZE

REV	DATE	DESCRIPTION	RVD
B	03.09.2026	ISSUED FOR RESORCE CONSENT AMENDMENT	SH
A	15.05.2026	ISSUED FOR RESOURCE CONSENT	SH

REVISIONS

REVISIONS

CLIENT

Auckland *Office* —
Studio 9/106 Saint Georges Bay Road, Parnell
Auckland 1023
P / 027 699 0794 *E* / auckland@bgeeng.com
bgeeng.com—

PROJECT
73a SIGNAL STATION ROAD
0473, SIGNAL STATION RD, OMAPERE NZ

STATUS
ISSUED FOR CONSENT
NOT TO BE USED FOR CONSTRUCTION

DRAWN	DESIGNED	CHECKED	APPROVED
NA	SM	SH	-

DATUM: AHD GDA2020 MGA-56 | GRID: - | SCALE: - AT A1 SIZE

TITLE
PROPOSED SITEWORKS AND DRAINAGE PLAN SHEET 2 OF 2

PROJECT No. NZ26110 | DRAWING No. CI-0302 | REV. B

C:\USERS\MARK.DALIDA\DC\ACCDOCS\BG&E AUT\URBAN CIVIL DRAFTING\PROJECT FILES\NZ26110 - 73A SSR\100.2 CIVIL\CAD\DRG\NZ26110-DRG-CI-0302.DWG
9/3/2026 9:31:07 AM

© BG&E Pty Limited

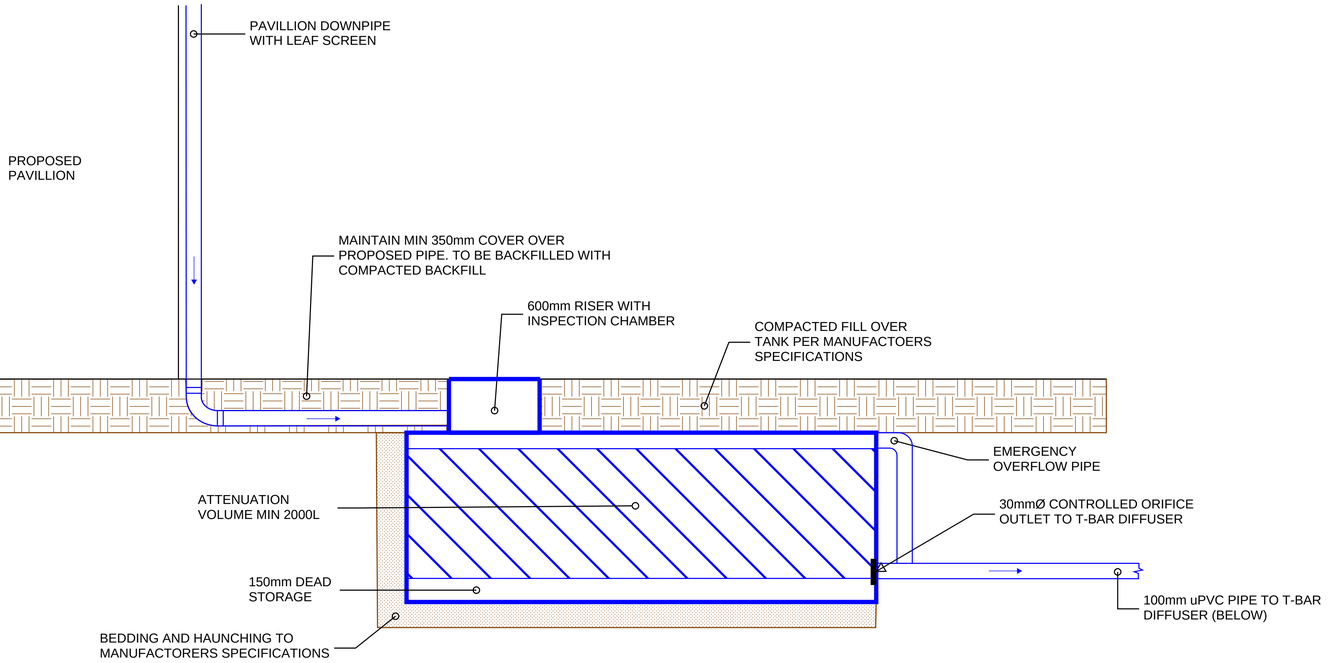

01 / 0300 ATTENUATION TANK TYPICAL DETAIL

NOT TO SCALE

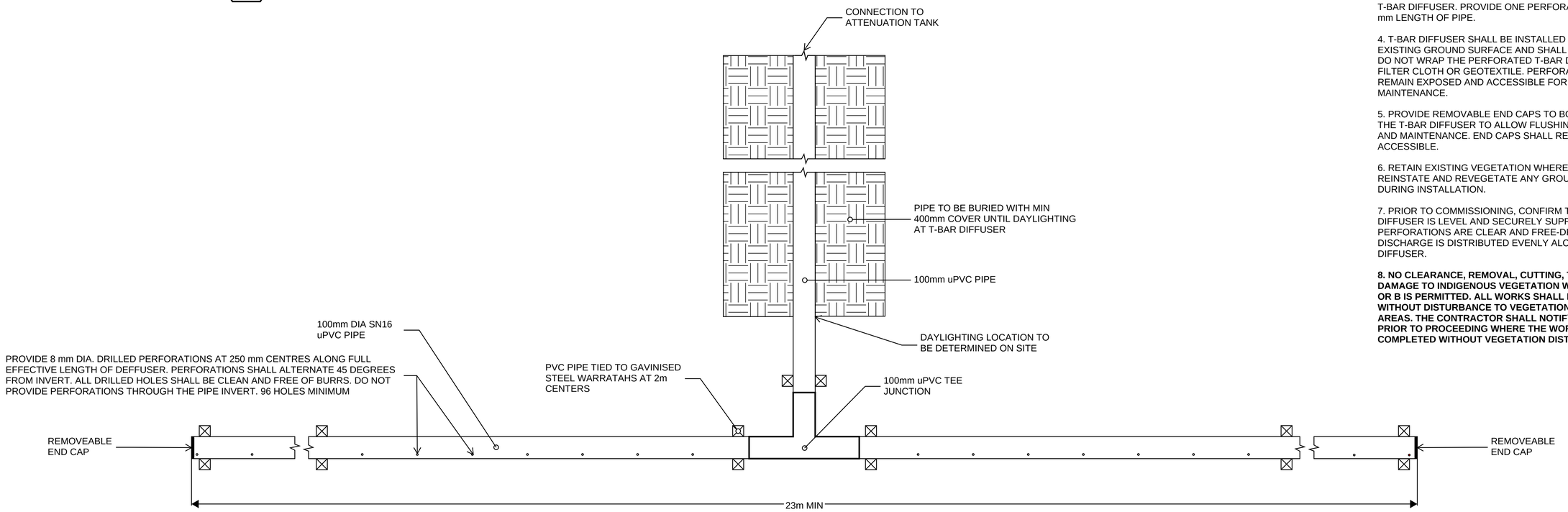

02 / 0300 T-BAR DIFFUSER DETAIL

NOT TO SCALE

NOTES

ATTENUATION TANK

1. PROVIDE 2,000 L MINIMUM EFFECTIVE STORMWATER ATTENUATION STORAGE VOLUME.

2. ATTENUATION TANK TO RECEIVE RUNOFF FROM PROPOSED PAVILION ROOF DRAINAGE SYSTEM ONLY.

3. ORIFICE INVERT TO BE MIN 150mm FROM BASE OF TANK TO ALLOW FOR SLUDGE ZONE.

4. ORIFICE PLATE TO BE SECURELY FIXED AND ACCESSIBLE FOR MAINTENANCE AND INSPECTION.

5. TANK AND ASSOCIATED PIPEWORK TO BE INSTALLED IN ACCORDANCE WITH MANUFACTURER'S RECOMMENDATIONS.

6. PROVIDE ACCESS FOR INSPECTION AND MAINTENANCE OF ATTENUATION TANK AND OUTLET CONTROL.

7. ALL PIPE PENETRATIONS TO BE WATERTIGHT.

8. TANK LOCATION AND FINISHED LEVELS TO BE COORDINATED WITH ARCHITECTURAL AND SITE GRADING REQUIREMENTS.

9. CONTRACTOR TO CONFIRM ALL EXISTING UNDERGROUND SERVICES PRIOR TO EXCAVATION.

T-BAR DIFFUSER

1. PROVIDE MINIMUM 23 m LONG DN100 SN16 uPVC ABOVE-GROUND T-BAR STORMWATER DIFFUSER, CENTRE-FED AS SHOWN.

2. T-BAR DIFFUSER SHALL BE INSTALLED GENERALLY PARALLEL TO THE EXISTING GROUND CONTOURS AND LEVEL ALONG ITS FULL EFFECTIVE LENGTH.

3. PROVIDE 8 mm DIA. DRILLED PERFORATIONS AT 250 mm CENTRES ALONG THE FULL EFFECTIVE LENGTH OF THE T-BAR DIFFUSER. PROVIDE ONE PERFORATION PER 250 mm LENGTH OF PIPE.

4. T-BAR DIFFUSER SHALL BE INSTALLED ABOVE THE EXISTING GROUND SURFACE AND SHALL NOT BE BURIED. DO NOT WRAP THE PERFORATED T-BAR DIFFUSER PIPE IN FILTER CLOTH OR GEOTEXTILE. PERFORATIONS SHALL REMAIN EXPOSED AND ACCESSIBLE FOR INSPECTION AND MAINTENANCE.

5. PROVIDE REMOVABLE END CAPS TO BOTH ENDS OF THE T-BAR DIFFUSER TO ALLOW FLUSHING, INSPECTION AND MAINTENANCE. END CAPS SHALL REMAIN ACCESSIBLE.

6. RETAIN EXISTING VEGETATION WHERE PRACTICABLE. REINSTATE AND REVEGETATE ANY GROUND DISTURBED DURING INSTALLATION.

7. PRIOR TO COMMISSIONING, CONFIRM THE T-BAR DIFFUSER IS LEVEL AND SECURELY SUPPORTED, ALL PERFORATIONS ARE CLEAR AND FREE-DRAINING, AND DISCHARGE IS DISTRIBUTED EVENLY ALONG THE DIFFUSER.

8. NO CLEARANCE, REMOVAL, CUTTING, TRIMMING OR DAMAGE TO INDIGENOUS VEGETATION WITHIN AREAS A OR B IS PERMITTED. ALL WORKS SHALL BE UNDERTAKEN WITHOUT DISTURBANCE TO VEGETATION WITHIN THESE AREAS. THE CONTRACTOR SHALL NOTIFY THE ENGINEER PRIOR TO PROCEEDING WHERE THE WORKS CANNOT BE COMPLETED WITHOUT VEGETATION DISTURBANCE.

REV	DATE	DESCRIPTION	RVD
B	03.09.2026	ISSUED FOR RESORCE CONSENT AMENDMENT	SH
A	15.05.2026	ISSUED FOR RESOURCE CONSENT	SH

REVISIONS

REV	DATE	DESCRIPTION	RVD

REVISIONS

CLIENT

Auckland *Office* —
Studio 9/106 Saint Georges Bay Road, Parnell
Auckland 1023
P / 027 699 0794 *E* / auckland@bgeeng.com
bgeeng.com—

PROJECT

73a SIGNAL STATION ROAD
0473, SIGNAL STATION RD, OMAPERE NZ

STATUS: ISSUED FOR CONSENT
NOT TO BE USED FOR CONSTRUCTION

DRAWN	DESIGNED	CHECKED	APPROVED
NA	SM	SH	-

DATUM	GRID	SCALE
AHD	GDA2020 MGA-S56	- AT A1 SIZE

TITLE: DRAINAGE DETAILS
SHEET 1 OF 3

PROJECT No.	DRAWING No.	REV.
NZ26110	CI-0380	B

C:\USERS\MARK.DALDA\DC\ACCDOCS\BG&E AU\URBAN CIVIL DRAFTING\PROJECT FILES\NZ26110 - 73A SSR\100 CIVIL\CAD\DRG\NZ26110-DRG-CI-0380.DWG
9/3/2026 9:16:20 AM

© BG&E Pty Limited

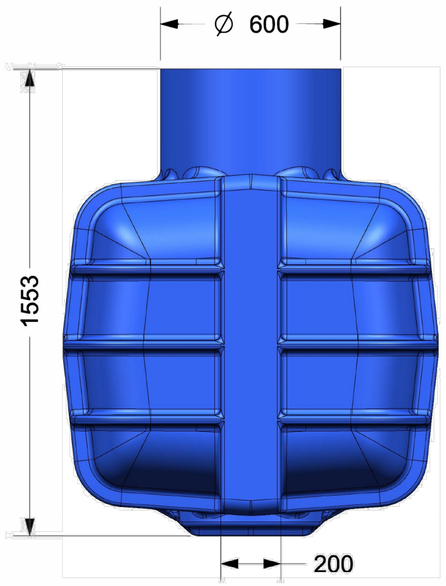

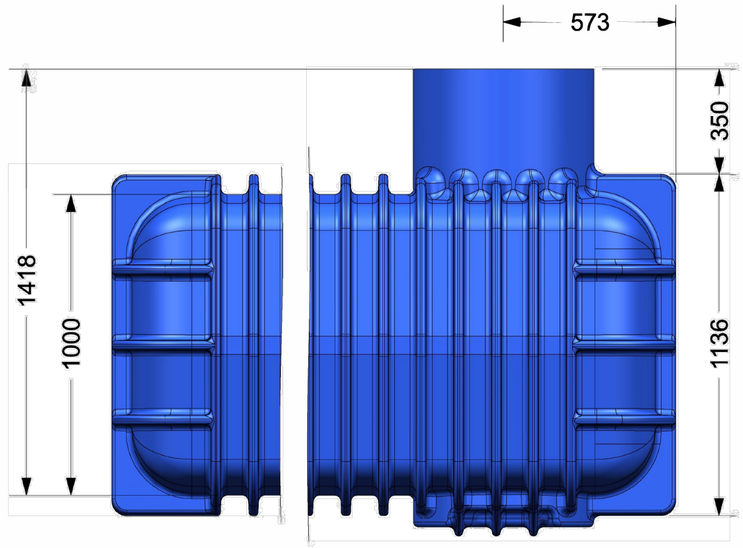

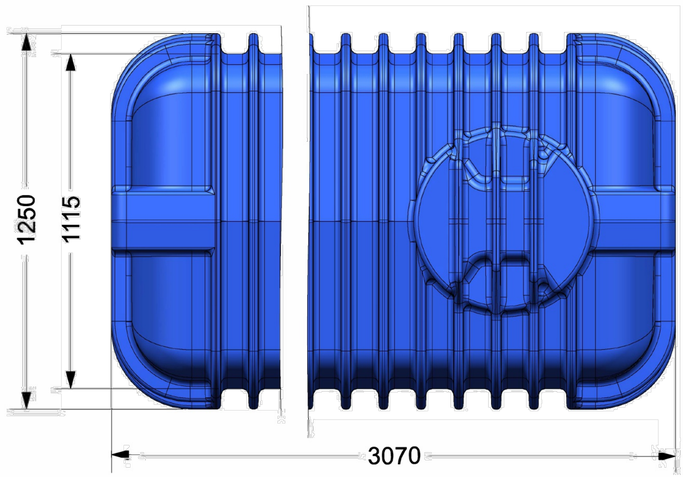

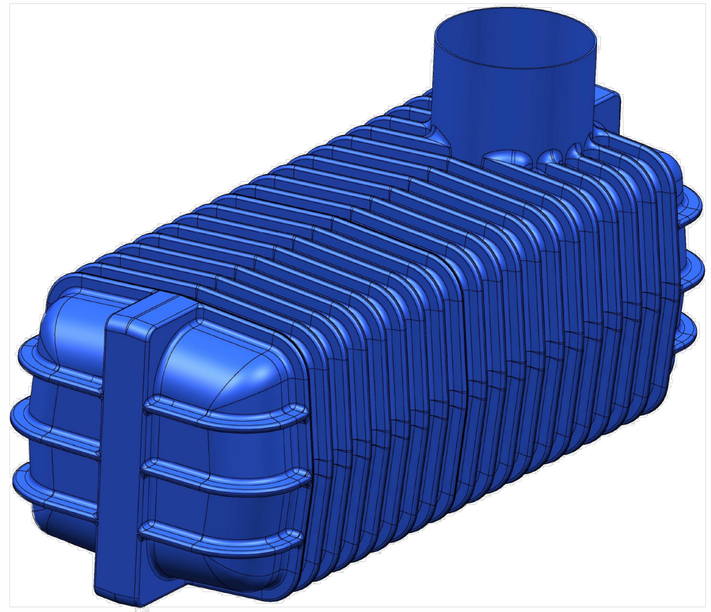

Promax

LIQUID MANAGEMENT SOLUTIONS

THIS DOCUMENT (AND THE INFORMATION SHOWN THEREON) IS CONFIDENTAL AND PROPRIETARY AND SHALL NOT BE DISCLOSED TO OTHERS IN HARD COPY OR ELECTRONIC FORM. REPRODUCED BY ANY MEANS, OR USED FOR ANY PURPOSE WITHOUT WRITTER CONSENT OF PROMAX PLASTICS LIMITED.

UNLESS OTHERWISE SPECIFIEDTHE INFORMATION WITHIN THIS TITLE BLOCK SHALL APPLY

-

DIMENSIONS ARE IN: MM
UNSPECIFIED DIMS IN 3D
** DIMENSIONS FOR REFERENCE*

CAGE CODE -

MATERIAL -

FINISH -

DES BY	A.P.	08 JUN 2021
DRAWN BY		
CHECK BY		
APPR BY	J. A.	08 JUN 2021

TITLE

Promax Enduro Underground Tank - 3000L

SIZE	DWG NO	REV
A3	UE1003000	-

SCALE 1:18 | MASS UNSP | SHEET 1 OF 1

REV	DATE	DESCRIPTION	RVD
B	03.09.2026	ISSUED FOR RESORCE CONSENT AMENDMENT	SH
A	15.05.2026	ISSUED FOR RESOURCE CONSENT	SH

REVISIONS

REVISIONS

CLIENT

Auckland *Office* —
Studio 9/106 Saint Georges Bay Road, Parnell
Auckland 1023
P / 027 699 0794 *E* / auckland@bgeeng.com
bgeeng.com—

PROJECT

73a SIGNAL STATION ROAD
0473, SIGNAL STATION RD, OMAPERE NZ

STATUS: ISSUED FOR CONSENT
NOT TO BE USED FOR CONSTRUCTION

DRAWN	DESIGNED	CHECKED	APPROVED
NA	SM	SH	-

DATUM AHD GDA2020 MGA-56 | GRID | SCALE - AT A1 SIZE

TITLE: DRAINAGE DETAILS
SHEET 2 OF 3

PROJECT No.	DRAWING No.	REV.
NZ26110	CI-0381	B

C:\USERS\MARK.DALDA\DC\ACCDOCS\BG&E AU\URBAN CIVIL DRAFTING\PROJECT FILES\NZ26110 - 73A SSR\100.2 CIVIL\CAD\ORD\NZ26110-ORG-CI-0381.DWG
9/3/2026 9:16:43 AM

© BG&E Pty Limited

Figure 8: Relationship of pipe trench to building foundation
Paragraph 5.6.1

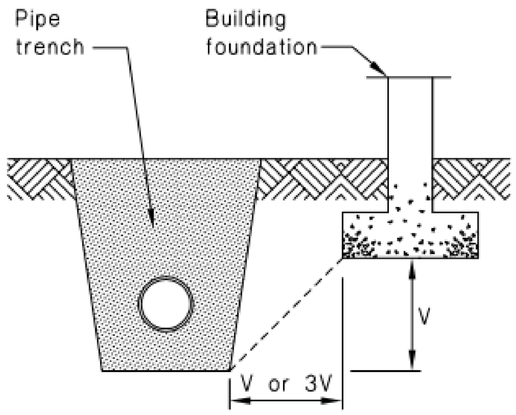

Minimum horizontal seperation shall be V or 3V dependant on length of time trench open, see Paragraph 5.6.1

Figure 9: Inspection points
Paragraph 5.7.3

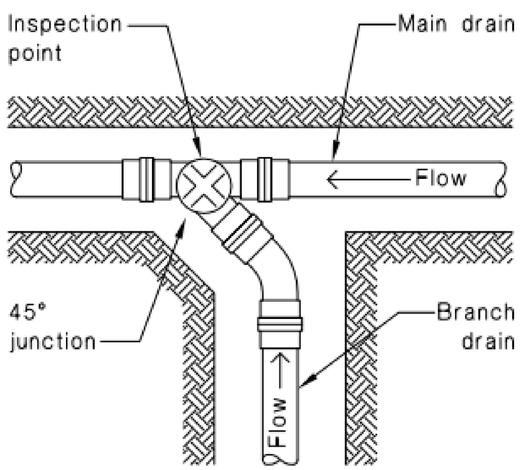

Figure 7: Bedding and backfilling
Paragraphs 2.1.1, 5.2.1, 5.3.1 and 5.4.1

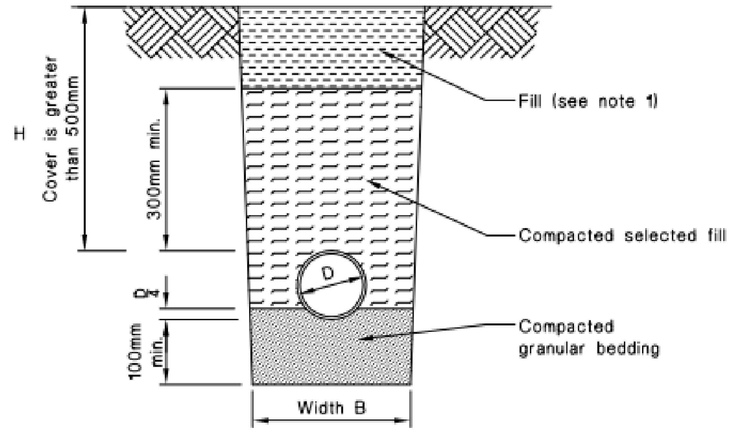

(a) Cover greater than 500 mm

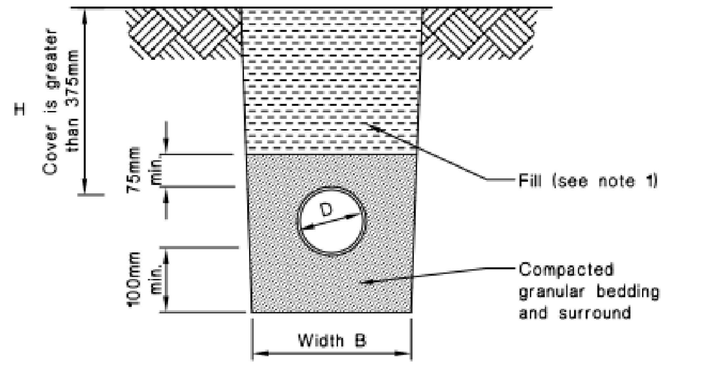

(b) Cover greater than 375 mm

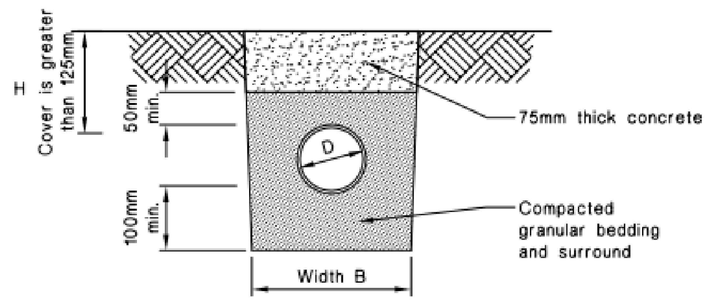

(c) Cover greater than 125 mm

NOTE:
1. Fill shall be:
-Ordinary fill where drains are located below gardens and open country.
-Compacted selected fill where the drains are located below residential driveways and similar areas subject to light traffic.

REV	DATE	DESCRIPTION	RVD
B	03.09.2026	ISSUED FOR RESORCE CONSENT AMENDMENT	SH
A	15.05.2026	ISSUED FOR RESOURCE CONSENT	SH

REVISIONS

Auckland *Office* —
Studio 9/106 Saint Georges Bay Road, Parnell
Auckland 1023
P / 027 699 0794 *E* / auckland@bgeeng.com
bgeeng.com—

PROJECT: 73a SIGNAL STATION ROAD
0473, SIGNAL STATION RD, OMAPERE NZ

STATUS: ISSUED FOR CONSENT
NOT TO BE USED FOR CONSTRUCTION

DRAWN	DESIGNED	CHECKED	APPROVED
NA	SM	SH	–

DATUM	GRID	SCALE
AHD	GDA2020 MGA-56	– AT A1 SIZE

TITLE: DRAINAGE DETAILS SHEET 3 OF 3

PROJECT No.	DRAWING No.	REV.
NZ26110	CI-0382	B

C:\USERS\MARK.DALGIA\DC\ACCDOCS\BG&E AU\URBAN CIVIL DRAFTING\PROJECT FILES\NZ26110 - 73A SSR\100 2 CIVIL\CAD\DRG\NZ26110-DRG-CI-0382.DWG
9/3/2026 9:16:59 AM

© BG&E Pty Limited

BG&E Studio 9/106 Saint Georges Bay Road Auckland, New Zealand	**SPREADSHEET CONTROL** **AUTHOR:** GS **REVIEWER:** SM **DATE:** 14/05/26	**TITLE**	STORMWATER PRE/POST FLOW ATTENUATION ROUTING CALCULATOR
		PROJECT	73a Signal Station Road
		DATE	15/05/2026
		JOB NO	NZ25xxx
		FILE REF	"REF"
		AUTHOR	GS
		PROJ LEADER	SM
		LOCATION / HIRDS SITE	73a Signal Station Road
		REVISION	A

NOTES

Pre-development surface	**Area (m²)**	**Runoff coefficient C**	**C x Area**
Pervious / grass	70.00	0.35	24.5
Existing roof	0.00	0.95	0
Existing paved / sealed	0.00	0.80	0
Other	0.00	0.50	0
TOTAL / weighted C	70.00	0.35	24.5

Post-development surface	**Area (m²)**	**Runoff coefficient C**	**C x Area (m²)**
Pervious / grass	0.00	0.35	0
New roof	70.00	0.95	66.5
New paved / sealed	0.00	0.80	0
Other	0.00	0.50	0
TOTAL / weighted C	70.00	0.95	66.5

Hydrology Output Check		**Flow Control / Tank Inputs**		
Pre total area (m²)	70.00	Allowable discharge factor	0.80	Typically 0.8 x pre-development peak flow (FNDC)
Pre weighted C	0.35	Proposed tank storage volume (m³)	2.00	Enter proposed active storage volume
Post total area (m²)	70.00	Active storage depth (m)	2.00	Depth between storage invert and overflow/TWL
Post weighted C	0.95	Tank plan area (m²)	1.00	Calculated as volume / active depth
Area change (m²)	0.00	Orifice diameter (mm)	30.00	Controlled outlet size
NOTE: EDIT BLUE CELLS ONLY		Orifice discharge coefficient Cd	0.62	Typical sharp-edged orifice
		Orifice centre above storage invert (m)	0.15	Used in routing head calculation
		Routing timestep (min)	5.00	5 min is usually adequate

73A SIGNAL STATION ROAD – PAVILION STORMWATER T-Bar Defussor				Notes
BG&E Studio 9/106 Saint Georges Bay Road Auckland, New Zealand	**SPREADSHEET CONTROL** **AUTHOR:** GS **REVIEWER:** SM **DATE:** 14/05/26	**TITLE**	T-Bar Defusser Calculations	
		PROJECT	73a Signal Station Road	
		DATE	3/09/2026	
		JOB NO	NZ25xxx	
		FILE REF	"REF"	
		AUTHOR	GS	
		PROJ LEADER	SM	
		LOCATION / HIRDS SITE	73a Signal Station Road	
		REVISION	A	
Design status	Building Consent			
Compliance basis	NZBC E1 specific design / Alternative Solution			
Geotechnical basis	Above-ground spreader supported; max long-term loading 20 L/day/m across contour			

1. DESIGN INPUTS

Parameter	Value	Units	Basis / Comment	Notes
Roof catchment area	70.00	m²	Pavilion roof catchment	
Roof runoff coefficient	0.95	-	Impervious roof surface	
Mean annual rainfall	2500.00	mm/year	Adopted Northland average rainfall	
1% AEP 10-min rainfall intensity	171.00	mm/hr	HIRDS design rainfall	
Attenuation tank active storage	2.00	m³	Existing design	
Attenuation tank control orifice	30.00	mm	Existing design	
Spreader effective length	23.00	m	Minimum effective length across contour	
Spreader pipe nominal diameter	100.00	mm	Rigid uPVC, centre-fed	
Perforation diameter	8.00	mm	Engineered outlet perforations	
Perforation spacing	250.00	mm	Uniform along full spreader length	
Orifice discharge coefficient (Cd)	0.62	-	Sharp-edged circular opening assumption	

2. GEOTECHNICAL LONG-TERM DISPERSAL LOADING CHECK

Check	Formula / Basis	Result	Units	Status
Annual roof runoff	A × MAR × C	166.25	m³/year	
Average daily runoff	Annual runoff / 365	455.48	L/day	
Allowable geotechnical loading	Geotechnical recommendation	20.00	L/day/m	
Required spreader length	Daily runoff / allowable loading	22.77	m	
Provided spreader length	Proposed design	23.00	m	
Actual loading	Daily runoff / provided length	19.80	L/day/m	
Geotechnical loading check	**Pass if actual loading ≤ allowable**	**PASS**		**PASS**

3. 1% AEP EMERGENCY FLOW CHECK

Check	Formula / Basis	Result	Units	Status
1% AEP peak roof inflow	Q = C i A / 3600	3.159	L/s	
Adopted emergency design flow	Use calculated 1% AEP roof inflow	3.159	L/s	
Half-flow to each side (centre-fed)	Q / 2	1.579	L/s	
DN100 velocity at centre	V = Q/A (indicative)	0.201	m/s	
Spreader arrangement	Centre-fed	11.5 m each side		
Emergency flow basis	Perforations sized to pass full 1% AEP inflow	1% AEP		

4. LEVEL SPREADER PERFORATION CAPACITY

Check	Formula / Basis	Result	Units	Acceptance
Number of perforations	Length / spacing	92.00	No.	-
Area per 8 mm hole	πd²/4	50.27	mm²	-
Total perforation area	No. holes × hole area	4624.42	mm²	-
Equivalent total opening diameter	Equivalent circular opening	76.73	mm	-
Required head to pass 1% AEP flow	Orifice equation using total opening area	61.86	mm	< DN100 nominal diameter (indicative)
Indicative DN100 friction loss – half spreader	Darcy-Weisbach, f=0.02, L=11.5 m	4.74	mm	Small relative to outlet head
Approx. total centre head	Outlet head + indicative friction loss	66.60	mm	< 100 mm
Average flow per perforation	Emergency flow / no. holes	0.03	L/s/hole	-
Perforation spacing	Design	250.00	mm	250 mm
Emergency capacity check	**Pass if approx. centre head < 100 mm**	**PASS**		
Normal operation note	**30 mm tank orifice remains primary flow control**	**30 mm control orifice upstream**		